City of Bristol
Firehouse 3 Building Committee

INFORMATION TO ACCESS THIS MEETING

Join Zoom Meeting
https://bristolct-gov.zoom.us/j/83598741904?pwd=T1gycjhRMTZIek9ZcHZiZU9mWXlsZz09

Meeting ID: 835 9874 1904
Passcode: 172964

The regular Fire Station 3 Building Committee meeting will be held on Wednesday October 22, 2025, at 6:00pm. in meeting room 1-4 City Hall, 111 N Main Street Bristol, CT 06010.

AGENDA

1. Call to Order
2. Public Participation
3. Approval of Minutes
    a. Approval of the September 24, 2025 meeting minutes
4. Architect Update
    a. Architect Chris Nardi's Monthly Report
    b. Construction Manager Frank Tomcak's Monthly Report
5. Old Business
6. New Business
7. Adjournment

PER ORDER OF THE CHAIRPERSON

Fire Station 3 Building Committee Regular Meeting
September 24, 2025

A Regular Meeting of the Fire Station 3 Building Committee was held on Wednesday, July 30, 2025 at 6:00 p.m., in Meeting Room 1-4 of City Hall, 111 N Main Street Bristol, CT

Present: Committee Member Sean Moore, Fire Chief Richard Hart, Committee Member John Lodovico, Committee Member David Maikowski, Commissioner Ray Rogozinski, Fire Captain Craig Henderson, and Architect Christopher Nardi.
Present on Zoom: Council Member Sebastian Panioto

1. **CALL TO ORDER**
    a. The meeting was called to order by Commissioner Moore at 6:00 p.m.

2. **PUBLIC PARTICIPATION**
    a. None.

3. **APPROVAL OF THE MEETING MINUTES**
    a. On motion of Commissioner Lodovico and seconded by Committee Member Maikowski, it was unanimously voted: To approve the August 27, 2025 Meeting Minutes. Following a voice vote in which there was no opposition, the Chairperson declared the motion carried.
    b. On motion of Commissioner Lodovico and seconded by Chief Hart, it was unanimously voted: To approve the September 10, 2025 Meeting Minutes. Following a voice vote in which there was no opposition, the Chairperson declared the motion carried.

4. **ARCHITECT UPDATE**
    a. Architect Christopher Nardi reviewed the schedule and two-week outlook. He shared that the brick veneer is going up, the windows are being installed, and the site prep for the asphalt is about to start.
    b. Pay Application #10 was reviewed. On motion of Committee Member Rogozinski seconded by Committee Member Lodovico it was unanimously voted to: Approve pay application #10 in the amount of $631,477.00.
    c. The committee reviewed the Purposed Change Orders Log. As of now the project has a credit of $71,066.00. New change orders were discussed.
        i. PCO 003R for additional concrete to the rear of the bay in place of asphalt in the amount of $52,387.00. Following a discussion, the committee decided on motion of Committee Member Rogozinski and

DRAFT

seconded by Committee Member Lodovico it was unanimously voted to: Not approve PCO 003R to extend the concrete.

ii. PCO 012 was reviewed for miscellaneous steel in the amount of $8,827.00. On motion of Committee Member Rogozinski and seconded by Chief Hart it was unanimously voted to: Approve PCO 023.

iii. PCO 025 for the removal of the wheel guards at the corners of the apparatus bay doors in the amount of $-10,049.00. On motion of Committee Member Rogozinski and seconded by Committee member Lodovico it was unanimously voted to: Approve PCO 012.

iv. PCO 022R was reviewed for the revisions to the sanitary sewer main in the amount of $-7,982.00. On motion of Committee Member Rogozinski and seconded by Committee Member Maikowski it was unanimously voted to: Approve PCO 022R.

v. PCO 026 was reviewed for the time and material incurred by breaking up and removing the ledge at the catch basin and boulder removal from the property in the amount of $2,791.00. On motion of Committee Member Rogozinski and seconded by Committee Member Lodovico it was unanimously voted to: Approve PCO 026.

vi. PCO 028 was reviewed for revisions to the shower walls not originally accounted for in the plans to add surrounds in the amount of $8,115.00. On motion of Committee Member Rogozinski and seconded by Committee Member Lodovico it was unanimously voted to: Approve PCO 028. It was noted there would be a small credit back for taping, mud, and paint.

d. The committee reviewed the entry way sign. They requested the following revisions be made,
    i. Firestation changed to Fire Station
    ii. Craig Henderson to Captain Crag Henderson
    iii. Purchasing Agent Roger Rousseau be moved to the Building Committee
e. Architect Nardi presented the VanZelm Field Report #3 and shared while there was a few small issues, but noted the speed of construction has been expedited and appears to be going well. On motion of Committee Member Rogozinski and seconded by Committee Member Lodovico it was unanimously voted to accept and file the report.

5. OLD BUSINESS

a. The committee discussed the awning over the side entrance door, Architect Nardi will review and report back with options.
b. The committee discussed furniture and the coordination of delivery dates. This is being coordinated between Department of Public Works and the Architect, Project Manager.

DRAFT

c. The committee discussed the findings of the test runs at Engine 4 with the apparatus and the ability for it to turn into the driveway and bay. Chief Hart shared that there was no change needed and the plan will work as it was designed. Architect Nardi advised that the schedule shows curbing and site preparations for asphalt is schedule for October 3rd, and noted it was still a critical item everyone was keeping close watch on.

6. NEW BUSINESS

a. None.

7. ADJOURN

a. On motion of Committee Member Rogozinski and seconded by Committee Member Lodovico it was unanimously voted: To adjourn at 6:35 p.m.

DRAFT

Recording Secretary:___Sara Bianchi_____

W. J. MOUNTFORD CO.
GENERAL CONTRACTOR • CONSTRUCTION MANAGER
170 Commerce Way, South Windsor, CT 06074, (860) 291-9448, Fax (860) 289-6382
License #00900574 • www.wjmountford.com

TO: Silver Petrucelli & Associates, Inc.

3190 Whitney Ave.

Hamden, CT 06518

SENT ELECTRONICALLY

DATE: October, 14 2025

ATTENTION: Chris Nardi

RE: New Firehouse #3

COPIES	COMPANY	DATE	DESCRIPTION
1	W. J . MOUNTFORD CO.	10/14/2025	REQUISITION # 11

FOR: WITH:

- ☐ APPROVAL
- ☐ FINAL APPROVAL
- ☐ APPROVAL AS NOTED
- ☐ CORRECTIONS
- ☐ RESUBMISSION
- ☐ YOUR FILES
- ☐ SIGN/RETURN TO US
- ☐ PAYMENT
- ☐ PROCESSING

REMARKS: FOR PROCESSING AND PAYMENT.

CC:

W. J. MOUNTFORD CO.

LEO DESAUTELS, VICE PRESIDENT

W.J. Mountford Co. is an Affirmative Action / Equal Opportunity Employer .

APPLICATION AND CERTIFICATE FOR PAYMENT

TO OWNER:
City of Bristol
111 North Main Street
Bristol, CT 06010

PROJECT:
New Firehouse #3
163 Church Ave
Bristol, CT 06010

APPLICATION NO: 11
PERIOD TO: 9/30/2025
CONTRACT FOR:
PURCHASE ORDER:

FROM CONTRACTOR:
W.J. Mountford Co.
170 Commerce Way
South Windsor, CT 06074

VIA ARCHITECT:
Silver Petrucelli & Associates, Inc.
3190 Whitney Ave
Hamden, CT 06518

CONTRACT DATE:
PROJECT NO:
UMA No.

CONTRACTOR'S APPLICATION FOR PAYMENT

1. ORIGINAL CONTRACT SUM		$	6,763,000
2. NET CHANGE ORDERS		$	(66,746)
3. TOTAL CONTRACT SUM		$	6,696,254
4. TOTAL COMPLETED & STORED TO DATE		$	4,672,583
5. RETAINAGE:			
COMPLETED TO DATE	5.00%	$	233,629
STORED MATERIAL	5.00%	$	-
6. TOTAL EARNED LESS RETAINAGE		$	4,438,954
7. LESS PREVIOUS CERTIFICATES FOR PAYMENT		$	3,732,332
8. CURRENT PAYMENT DUE		$	706,622
9. BALANCE TO FINISH		$	2,257,300

CHANGE ORDER SUMMARY	ADDITIONS	DEDUCTIONS
Total changes approved in previous months	49,714	$ 118,570
Total approved this month	45,908	$ 43,798
Total	95,622	$ 162,368
Net Changes	$	(66,746)

CONTRACTOR:

By: W.J. Mountford Co. Date: 10/14/2025
Scott P. Mountford, President

State of: Connecticut
County of: Hartford
Subscribed and sworn before me this 14th day of October, 2025

Notary Public: Jenifer R. Falk
My Commission Expires: March 31, 2026

JENIFER R. FALK NOTARY PUBLIC CONNECTICUT

ARCHITECT'S CERTIFICATE FOR PAYMENT

AMOUNT CERTIFIED..... $ 706,622.-

ARCHITECT:
By: Date: 10-15-2025

Continuation Sheet

Contractor: W.J. Mountford Co.
170 Commerce Way
South Windsor, CT 06074

Project: New Firehouse #3
163 Church Ave
Bristol, CT 06010

APPLICATION NO: 11
APPLICATION DATE: 10/14/2025
PERIOD TO: 9/30/2025
ARCHITECT'S PROJECT NO:

A	B	C	D	E	F	G		H	I
			WORK COMPLETED						
ITEM NO.	DESCRIPTION OF WORK	SCHEDULED VALUE	FROM PREVIOUS APPLICATION *(D + E)*	THIS PERIOD	MATERIALS PRESENTLY STORED *(Not in D or E)*	TOTAL COMPLETED AND STORED TO DATE *(D+E+F)*	% *(G ÷ C)*	BALANCE TO FINISH *(C - G)*	RETAINAGE *(If variable rate)*
1	**General Conditions**								
2	Supervision	152,380	102,261	9,800	0	112,061	74%	40,319	5,603
3	Project Management	52,000	29,000	2,000	0	31,000	60%	21,000	1,550
4	Temp. Office & Equip.	9,625	7,000	700	0	7,700	80%	1,925	385
5	Temp. Storage Boxes	2,200	1,500	150	0	1,650	75%	550	83
6	Temp. Phones	2,400	1,680	200	0	1,880	78%	520	94
7	Temp. Toilets	7,350	3,850	450	0	4,300	59%	3,050	215
8	Temp. Fence	16,500	16,500	0	0	16,500	100%	0	825
9	Temp. Partitions	4,900	1,500	700	0	2,200	45%	2,700	110
10	Temp. Heat	18,800	0	0	0	0	0%	18,800	0
11	Temp. Utilities	25,700	8,500	1,000	0	9,500	37%	16,200	475
12	Temp.Cold Weather Prot.	14,200	12,000	0	0	12,000	85%	2,200	600
13	Schedule Cost	6,500	4,500	0	0	4,500	69%	2,000	225
14	Dumpsters	14,000	5,400	2,100	0	7,500	54%	6,500	375
15	Cleaning	4,200	0	0	0	0	0%	4,200	0
16	Const. Cleaning	16,500	5,500	1,500	0	7,000	42%	9,500	350
17	Bonds	63,500	63,500	0	0	63,500	100%	0	3,175
18	Insurance	38,200	38,200	0	0	38,200	100%	0	1,910
19	O&M/ Punch List	4,800	0	0	0	0	0%	4,800	0
20	Survey	4,500	4,500	0	0	4,500	100%	0	225
21	Project Sign	1,400	1,400	0	0	1,400	100%	0	70
22	Hoisting	10,500	6,500	1,000	0	7,500	71%	3,000	375
23	Safety	3,800	2,700	200	0	2,900	76%	900	145
24	Trucking/Deliveries	3,200	1,750	250	0	2,000	63%	1,200	100
25	Fuel&Oil Job Site	8,500	5,300	0	0	5,300	62%	3,200	265
26	**Allowances**			0					
27	Utility Companies	25,000	22,382	0	0	22,382	90%	2,618	1,119
28	Fire Axe	5,000	0	0	0	0	0%	5,000	0

Continuation Sheet

Contractor: W.J. Mountford Co.
170 Commerce Way
South Windsor, CT 06074

Project: New Firehouse #3
163 Church Ave
Bristol, CT 06010

APPLICATION NO: 11
APPLICATION DATE: 10/14/2025
PERIOD TO: 9/30/2025
ARCHITECT'S PROJECT NO:

A	B	C	D	E	F	G		H	I
			WORK COMPLETED						
ITEM NO.	DESCRIPTION OF WORK	SCHEDULED VALUE	FROM PREVIOUS APPLICATION *(D + E)*	THIS PERIOD	MATERIALS PRESENTLY STORED *(Not in D or E)*	TOTAL COMPLETED AND STORED TO DATE *(D+E+F)*	% *(G ÷ C)*	BALANCE TO FINISH *(C - G)*	RETAINAGE *(If variable rate)*
29	**Sitework**			0					
30	F&I Erosion Control	9,000	9,000	0	0	9,000	100%	0	450
31	Remove Trees & Stumps	35,000	35,000	0	0	35,000	100%	0	1,750
32	E&B Foundations	45,000	45,000	0	0	45,000	100%	0	2,250
33	E&B Underslab Mechanicals	8,000	8,000	0	0	8,000	100%	0	400
34	Material Underslab Prep	22,000	22,000	0	0	22,000	100%	0	1,100
35	F&I Storm Drainage	250,000	250,000	0	0	250,000	100%	0	12,500
36	F&I Storm In Road	40,000	40,000	0	0	40,000	100%	0	2,000
37	Sanitary Sewer	40,000	30,000	10,000	0	40,000	100%	0	2,000
38	Water Service	75,000	68,000	2,000	0	70,000	93%	5,000	3,500
39	Electrical/Comm Service	13,000	9,000	2,000	0	11,000	85%	2,000	550
40	E&B Site Elec & Bases	35,000	12,500	2,500	0	15,000	43%	20,000	750
41	E&B Gas Service	3,000	0	0	0	0	0%	3,000	0
42	Site Concrete & Base	158,000	0	0	0	0	0%	158,000	0
43	Paving & Base	146,000	0	0	0	0	0%	146,000	0
44	Signage & Bollards	10,000	0	0	0	0	0%	10,000	0
45	Line Striping	5,000	0	0	0	0	0%	5,000	0
46	Spread Topsoil	15,000	0	0	0	0	0%	15,000	0
47	Surveying & Layout	9,000	6,000	0	0	6,000	67%	3,000	300
48	Lawns & Plantings	36,000	0	0	0	0	0%	36,000	0
49	**Site Improvements**			0					
50	Fencing	23,200	0	0	0	0	0%	23,200	0
51	Flagpole	5,400	0	0	0	0	0%	5,400	0

Continuation Sheet

Contractor: W.J. Mountford Co.
170 Commerce Way
South Windsor, CT 06074

Project: New Firehouse #3
163 Church Ave
Bristol, CT 06010

APPLICATION NO: 11
APPLICATION DATE: 10/14/2025
PERIOD TO: 9/30/2025
ARCHITECT'S PROJECT NO:

A	B	C	D	E	F	G		H	I
			WORK COMPLETED						
ITEM NO.	DESCRIPTION OF WORK	SCHEDULED VALUE	FROM PREVIOUS APPLICATION *(D + E)*	THIS PERIOD	MATERIALS PRESENTLY STORED *(Not in D or E)*	TOTAL COMPLETED AND STORED TO DATE *(D+E+F)*	% *(G ÷ C)*	BALANCE TO FINISH *(C - G)*	RETAINAGE *(If variable rate)*
52	**Concrete**			0					
53	Equip.Pump & Misc.	6,500	6,000	0	0	6,000	92%	500	300
54	Concrete Matl.	93,930	83,000	10,000	0	93,000	99%	930	4,650
55	Concrete Lumber	7,950	7,950	0	0	7,950	100%	0	398
56	Concrete Panels	13,950	13,950	0	0	13,950	100%	0	698
57	Concrete Footings Lab.	24,220	24,220	0	0	24,220	100%	0	1,211
58	Concrete Walls	45,960	45,960	0	0	45,960	100%	0	2,298
59	Leveling Plates	6,011	6,011	0	0	6,011	100%	0	301
60	Rebar & Mesh Matl.	24,511	24,511	0	0	24,511	100%	0	1,226
61	Rebar Labor	21,474	18,500	2,000	0	20,500	95%	974	1,025
62	Prep Slabs	14,660	8,800	5,200	0	14,000	95%	660	700
63	Place & Finish Slabs	22,230	13,300	6,930	0	20,230	91%	2,000	1,012
64	Control Joints	4,660	2,800	1,860	0	4,660	100%	0	233
65	Trench Drains	3,752	3,752	0	0	3,752	100%	0	188
66	Mechanical Pads	2,950	0	2,950	0	2,950	100%	0	148
67	Misc Concrete Items	9,610	9,000	310	0	9,310	97%	300	466
68	**Masonry**								
69	Mobilization	5,000	5,000	0	0	5,000	100%	0	250
70	Submittals/Shop Dwgs/Administration	9,000	9,000	0	0	9,000	100%	0	450
71	Misc. Access	20,000	18,000	2,000	0	20,000	100%	0	1,000
72	Rebar	12,000	12,000	0	0	12,000	100%	0	600
73	Mortar/Grout	22,000	19,800	1,450	0	21,250	97%	750	1,063
74	Block Material	25,000	25,000	0	0	25,000	100%	0	1,250
75	Block Labor	147,000	147,000	0	0	147,000	100%	0	7,350
76	Brick Material	40,000	20,000	20,000	0	40,000	100%	0	2,000
77	Brick Labor	155,000	15,500	124,000	0	139,500	90%	15,500	6,975
77	Cast Stone Material	20,000	0	0	0	0	0%	20,000	0
77	Cast Stone Labor	10,000	0	0	0	0	0%	10,000	0

Continuation Sheet

Contractor: W.J. Mountford Co.
170 Commerce Way
South Windsor, CT 06074

Project: New Firehouse #3
163 Church Ave
Bristol, CT 06010

APPLICATION NO: 11
APPLICATION DATE: 10/14/2025
PERIOD TO: 9/30/2025
ARCHITECT'S PROJECT NO:

A	B	C	D	E	F	G		H	I
			WORK COMPLETED						
ITEM NO.	DESCRIPTION OF WORK	SCHEDULED VALUE	FROM PREVIOUS APPLICATION *(D + E)*	THIS PERIOD	MATERIALS PRESENTLY STORED *(Not in D or E)*	TOTAL COMPLETED AND STORED TO DATE *(D+E+F)*	% *(G ÷ C)*	BALANCE TO FINISH *(C - G)*	RETAINAGE *(If variable rate)*
78	**Structural Steel**								
79	Shop Drawings Submittals	25,000	25,000	0	0	25,000	100%	0	1,250
80	Cast-In items	7,000	7,000	0	0	7,000	100%	0	350
81	Structural Materials	200,000	200,000	0	0	200,000	100%	0	10,000
82	Fabrication	75,000	75,000	0	0	75,000	100%	0	3,750
83	Erection of Structural Steel	96,600	94,000	2,600	0	96,600	100%	0	4,830
84	Decking Materials	110,000	110,000	0	0	110,000	100%	0	5,500
85	**Misc Metals**			0					
86	Shop Drawings Submittals	6,000	6,000	0	0	6,000	100%	0	300
87	Wheel Guards	14,500	0	0	0	0	0%	14,500	0
88	Roof Ladder Material	1,800	0	0	0	0	0%	1,800	0
89	Roof Ladder Fabrication	2,000	0	0	0	0	0%	2,000	0
90	Roof Ladder Install	1,500	0	0	0	0	0%	1,500	0
91	Lintel Materials	5,600	5,600	0	0	5,600	100%	0	280
92	**Rough Carpentry**			0					
93	Material	10,852	9,500	500	0	10,000	92%	852	500
94	Labor	29,050	25,000	2,500	0	27,500	95%	1,550	1,375
95	**Millwork & Trim**			0					
96	Cabinets	29,211	0	0	0	0	0%	29,211	0
97	Stainless Steel Counter	8,160	0	0	0	0	0%	8,160	0
98	Corian Counters	10,564	0	0	0	0	0%	10,564	0
99	Labor	14,365	0	0	0	0	0%	14,365	0
100	**Exterior Siding & Trim**			0					
101	Material	36,740	13,000	20,500	0	33,500	91%	3,240	1,675
102	Labor	49,725	15,000	29,000	0	44,000	88%	5,725	2,200
103	**Damproofing**			0					
104	Material	300	300	0	0	300	100%	0	15
105	Labor	2,100	2,100	0	0	2,100	100%	0	105
106	**Batt Insulation**			0					
107	Material	15,200	11,000	0	0	11,000	72%	4,200	550
108	Labor	4,500	3,250	0	0	3,250	72%	1,250	163

Continuation Sheet

Contractor: W.J. Mountford Co.
170 Commerce Way
South Windsor, CT 06074

Project: New Firehouse #3
163 Church Ave
Bristol, CT 06010

APPLICATION NO: 11
APPLICATION DATE: 10/14/2025
PERIOD TO: 9/30/2025
ARCHITECT'S PROJECT NO:

A	B	C	D	E	F	G		H	I
			WORK COMPLETED						
ITEM NO.	DESCRIPTION OF WORK	SCHEDULED VALUE	FROM PREVIOUS APPLICATION (D + E)	THIS PERIOD	MATERIALS PRESENTLY STORED (Not in D or E)	TOTAL COMPLETED AND STORED TO DATE (D+E+F)	% (G ÷ C)	BALANCE TO FINISH (C - G)	RETAINAGE (If variable rate)
109	**Air Barrier**			0					
110	Installation	28,000	18,200	0	0	18,200	65%	9,800	910
111	**Roofing**			0					
112	Insurance	4,000	4,000	0	0	4,000	100%	0	200
113	Bond	4,000	4,000	0	0	4,000	100%	0	200
114	Submittals	1,000	1,000	0	0	1,000	100%	0	50
115	Safety	1,500	750	0	0	750	50%	750	38
116	Equipment	6,500	6,500	0	0	6,500	100%	0	325
117	Dumpsters	3,500	0	0	0	0	0%	3,500	0
118	Schedule	1,000	900	0	0	900	90%	100	45
119	Mobilization	1,500	1,500	0	0	1,500	100%	0	75
120	Shingle Roof System - Material	12,500	12,500	0	0	12,500	100%	0	625
121	Shingle Roof System - Install	16,500	9,075	0	0	9,075	55%	7,425	454
122	TPO Roof System - Material	60,950	60,950	0	0	60,950	100%	0	3,048
123	TPO Roof System - Install	51,800	44,030	0	0	44,030	85%	7,770	2,202
124	Roof Edge Metal Material	27,450	5,000	0	0	5,000	18%	22,450	250
125	Roof Edge Metal Labor	22,800	2,000	0	0	2,000	9%	20,800	100
126	Demobilization	2,000	0	0	0	0	0%	2,000	0
127	Daily Clean Up	2,000	800	0	0	800	40%	1,200	40
128	Closeouts	1,000	0	0	0	0	0%	1,000	0
129	**Sheetmetal Flashing**	3,100	0	0	0	0	0%	3,100	0
130	**Firestopping**	4,500	0	0	0	0	0%	4,500	0
131	**Joint Sealents**			0					
132	Furnish & Install	16,200	0	0	0	0	0%	16,200	0
133	**H/M Doors & Frames**			0					
134	Material	35,600	16,000	0	0	16,000	45%	19,600	800
135	Labor	13,500	7,500	0	0	7,500	56%	6,000	375
136	**Overhead Doors**			0					
137	Material	275,000	0	0	0	0	0%	275,000	0
138	Labor	15,000	0	0	0	0	0%	15,000	0

Continuation Sheet

Contractor: W.J. Mountford Co.
170 Commerce Way
South Windsor, CT 06074

Project: New Firehouse #3
163 Church Ave
Bristol, CT 06010

APPLICATION NO: 11
APPLICATION DATE: 10/14/2025
PERIOD TO: 9/30/2025
ARCHITECT'S PROJECT NO:

A	B	C	D	E	F	G		H	I
			WORK COMPLETED						
ITEM NO.	DESCRIPTION OF WORK	SCHEDULED VALUE	FROM PREVIOUS APPLICATION *(D + E)*	THIS PERIOD	MATERIALS PRESENTLY STORED *(Not in D or E)*	TOTAL COMPLETED AND STORED TO DATE *(D+E+F)*	% *(G ÷ C)*	BALANCE TO FINISH *(C - G)*	RETAINAGE *(If variable rate)*
139	**Alum.Storefronts.**			0					
140	Alum Storefront Ext.	38,000	36,054	1,946	0	38,000	100%	0	1,900
141	Alum Entrance Ext.	19,500	18,340	0	0	18,340	94%	1,160	917
142	Glass Exterior	28,820	0	25,073	0	25,073	87%	3,747	1,254
143	Glass Interior	7,500	0	0	0	0	0%	7,500	0
144	Entrance Hardware	19,650	0	0	0	0	0%	19,650	0
145	Sealents	2,227	1,000	1,000	0	2,000	90%	227	100
146	Fastener & Misc.	2,096	1,000	1,096	0	2,096	100%	0	105
147	Freight	3,930	3,930	0	0	3,930	100%	0	197
148	FAB Labor	13,830	6,841	5,606	0	12,447	90%	1,383	622
149	Storefront Ext Labor	18,595	0	6,508	0	6,508	35%	12,087	325
150	Entrance Ext Labor	3,916	0	0	0	0	0%	3,916	0
151	Glazing Int. Labor	1,900	0	0	0	0	0%	1,900	0
152	Travel	3,200	0	1,216	0	1,216	38%	1,984	61
153	Measuring	1,455	0	1,455	0	1,455	100%	0	73
154	Shop Drawing & Submittal	7,175	7,175	0	0	7,175	100%	0	359
155	Engineering	4,930	4,930	0	0	4,930	100%	0	247
156	Lifts & Staging	6,256	0	3,003	0	3,003	48%	3,253	150
157	Safety	1,739	0	738	0	738	42%	1,001	37
158	Closeout	4,391	0	0	0	0	0%	4,391	0
159	**Finish Hardware**			0					
160	Material	28,500	0	0	0	0	0%	28,500	0
161	Labor	8,200	0	0	0	0	0%	8,200	0

Continuation Sheet

Contractor: W.J. Mountford Co.
170 Commerce Way
South Windsor, CT 06074

Project: New Firehouse #3
163 Church Ave
Bristol, CT 06010

APPLICATION NO: 11
APPLICATION DATE: 10/14/2025
PERIOD TO: 9/30/2025
ARCHITECT'S PROJECT NO:

A	B	C	D	E	F	G		H	I
			WORK COMPLETED						
ITEM NO.	DESCRIPTION OF WORK	SCHEDULED VALUE	FROM PREVIOUS APPLICATION *(D + E)*	THIS PERIOD	MATERIALS PRESENTLY STORED *(Not in D or E)*	TOTAL COMPLETED AND STORED TO DATE *(D+E+F)*	% *(G ÷ C)*	BALANCE TO FINISH *(C - G)*	RETAINAGE *(If variable rate)*
162	**Drywall + Metal Stud Framing**			0					
163	Mobilization	5,000	5,000	0	0	5,000	100%	0	250
164	Shop Drawings Submittals	8,000	8,000	0	0	8,000	100%	0	400
165	Roof Framing	97,700	97,700	0	0	97,700	100%	0	4,885
166	Roof Sheathing	28,000	28,000	0	0	28,000	100%	0	1,400
167	Exterior Wall Framing	25,000	23,750	1,250	0	25,000	100%	0	1,250
168	Exterior Wall Sheathing	14,000	13,300	(300)	0	13,000	93%	1,000	650
169	Exterior Blocking	6,300	6,300	(700)	0	5,600	89%	700	280
170	Interior Framing	30,000	27,000	1,000	0	28,000	93%	2,000	1,400
171	Insulation	21,000	21,000	0	0	21,000	100%	0	1,050
172	Interior in Wall Blocking	3,000	3,000	0	0	3,000	100%	0	150
173	Dryall Hang	36,000	25,200	5,400	0	30,600	85%	5,400	1,530
174	Drywall Tape	36,000	3,600	27,000	0	30,600	85%	5,400	1,530
175	**Ceramic Tile**			0					
176	To be broken down	15,500	0	0	0	0	0%	15,500	0
177	**Acoustical**			0					
178	Submittals	300	0	0	0	0	0%	300	0
179	Grid Material	7,100	0	0	0	0	0%	7,100	0
180	Grid Labor	6,000	0	0	0	0	0%	6,000	0
181	Tile Material	14,000	0	0	0	0	0%	14,000	0
182	Tile Labor	4,000	0	0	0	0	0%	4,000	0
183	Closeout	300	0	0	0	0	0%	300	0

Continuation Sheet

Contractor: W.J. Mountford Co.
170 Commerce Way
South Windsor, CT 06074

Project: New Firehouse #3
163 Church Ave
Bristol, CT 06010

APPLICATION NO: 11
APPLICATION DATE: 10/14/2025
PERIOD TO: 9/30/2025
ARCHITECT'S PROJECT NO:

A	B	C	D	E	F	G		H	I
			WORK COMPLETED						
ITEM NO.	DESCRIPTION OF WORK	SCHEDULED VALUE	FROM PREVIOUS APPLICATION *(D + E)*	THIS PERIOD	MATERIALS PRESENTLY STORED *(Not in D or E)*	TOTAL COMPLETED AND STORED TO DATE *(D+E+F)*	% *(G ÷ C)*	BALANCE TO FINISH *(C - G)*	RETAINAGE *(If variable rate)*
184	**Resilent Floor**			0					
185	To be broken down	25,500	0	0	0	0	0%	25,500	0
186	**Carpet**			0					
187	To be broken down	6,600	0	0	0	0	0%	6,600	0
188	**Resinous Flooring**			0					
189	To be broken down	10,200	0	0	0	0	0%	10,200	0
190	**Wall Graffic**			0					
191	To be broken down	7,950	0	0	0	0	0%	7,950	0
192	**Painting**			0					
193	To be broken down	56,000	0	0	0	0	0%	56,000	0
194	**Display Case**	5,100	0	0	0	0	0%	5,100	0
195	**Signage**			0					
196	To be broken down	19,500	0	0	0	0	0%	19,500	0
197	**Wall Protection**			0					
198	Material	6,500	0	0	0	0	0%	6,500	0
199	Labor	4,100	0	0	0	0	0%	4,100	0
200	**AID Specialties**	3,500	0	0	0	0	0%	3,500	0
201	**Fire Extinguishers**	2,500	0	0	0	0	0%	2,500	0
202	**Turnout Gear Lockers**			0					
203	Material	10,200	0	0	0	0	0%	10,200	0
204	Labor	5,100	0	0	0	0	0%	5,100	0
205	**Toilet Accessories**			0					
206	Material	21,800	0	0	0	0	0%	21,800	0
207	Labor	2,300	0	0	0	0	0%	2,300	0
208	**Install Furn,By Owner**	4,300	0	0	0	0	0%	4,300	0
209	**Washer & Dryer**	3,300	0	0	0	0	0%	3,300	0

Continuation Sheet

Contractor: W.J. Mountford Co.
170 Commerce Way
South Windsor, CT 06074

Project: New Firehouse #3
163 Church Ave
Bristol, CT 06010

APPLICATION NO: 11
APPLICATION DATE: 10/14/2025
PERIOD TO: 9/30/2025
ARCHITECT'S PROJECT NO:

A	B	C	D	E	F	G		H	I
			WORK COMPLETED						
ITEM NO.	DESCRIPTION OF WORK	SCHEDULED VALUE	FROM PREVIOUS APPLICATION *(D + E)*	THIS PERIOD	MATERIALS PRESENTLY STORED *(Not in D or E)*	TOTAL COMPLETED AND STORED TO DATE *(D+E+F)*	% *(G ÷ C)*	BALANCE TO FINISH *(C - G)*	RETAINAGE *(If variable rate)*
210	**Food Service Equip**			0					
211	Reach-In Refigerator	6,927	6,927	0	0	6,927	100%	0	346
212	Reach-In Freezer	9,180	9,180	0	0	9,180	100%	0	459
213	Undercounter Refridgerator	2,510	2,510	0	0	2,510	100%	0	125
214	Conveyor Toaster	1,105	1,105	0	0	1,105	100%	0	55
215	Microwave Over	1,518	1,518	0	0	1,518	100%	0	76
216	Range 60", 6 Open Burners, 2	7,647	7,647	0	0	7,647	100%	0	382
217	Faucet, Kettle/Pot Filler	148	148	0	0	148	100%	0	7
218	Blue Hose Gas Connector Kit	372	372	0	0	372	100%	0	19
219	Exhaust Hood	4,847	0	4,847	0	4,847	100%	0	242
220	Fire Suppression System	9,610	0	0	0	0	0%	9,610	0
221	Smart Controls	1,840	0	0	0	0	0%	1,840	0
222	Coffee Brewer	819	819	0	0	818.81	100%	0	41
223	Drop In Sink	2,373	0	0	0	0	0%	2,373	0
224	Deck Mount Faucet	158	158	0	0	158	100%	0	8
225	Undermount Sink	1,500	1,500	0	0	1,500	100%	0	75
226	Deck Mount Faucet	109	109	0	0	109	100%	0	5
227	Waste Basket	58	0	0	0	0	0%	58	0
228	Tabletop Waste Bin	48	48	0	0	48	100%	0	2
229	Dishwasher, Undercounter	1,147	0	0	0	0	0%	1,147	0
230	Ice Maker, Cube-Style	5,259	5,259	0	0	5,259	100%	0	263
231	Install	4,933	0	0	0	0	0%	4,933	0
232	Submittals/Drawings	4,453	4,453	0	0	4,453	100%	0	223
233	Hood Hang	4,439	0	0	0	0	0%	4,439	0
234	**Window Shades**	14,500	0	0	0	0	0%	14,500	0
235	**Entrance Mats**	4,200	0	0	0	0	0%	4,200	0

Continuation Sheet

Contractor: W.J. Mountford Co.
170 Commerce Way
South Windsor, CT 06074

Project: New Firehouse #3
163 Church Ave
Bristol, CT 06010

APPLICATION NO: 11
APPLICATION DATE: 10/14/2025
PERIOD TO: 9/30/2025
ARCHITECT'S PROJECT NO:

A	B	C	D	E	F	G		H	I
			WORK COMPLETED						
ITEM NO.	DESCRIPTION OF WORK	SCHEDULED VALUE	FROM PREVIOUS APPLICATION *(D + E)*	THIS PERIOD	MATERIALS PRESENTLY STORED *(Not in D or E)*	TOTAL COMPLETED AND STORED TO DATE *(D+E+F)*	% *(G ÷ C)*	BALANCE TO FINISH *(C - G)*	RETAINAGE *(If variable rate)*
236	**Sprinkler**			0					
237	Design / Permit	9,500	9,500	0	0	9,500	100%	0	475
238	Rough Labor	30,000	27,000	0	0	27,000	90%	3,000	1,350
239	Rough Material	15,000	15,000	0	0	15,000	100%	0	750
240	Finish Labor	5,000	0	0	0	0	0%	5,000	0
241	Finish Material	1,500	0	0	0	0	0%	1,500	0
242	Safety	1,000	0	0	0	0	0%	1,000	0
243	Clean Up	500	0	0	0	0	0%	500	0
244	Close Out Documents	2,500	0	0	0	0	0%	2,500	0
245	**Plumbing**			0					
246	Submittals	5,000	3,000	1,500	0	4,500	90%	500	225
247	Mobilization	4,000	4,000	0	0	4,000	100%	0	200
248	Sanitary/Cond Pipe	28,000	28,000	0	0	28,000	100%	0	1,400
249	Install Sanitary/Cond Pipe	33,000	27,390	5,610	0	33,000	100%	0	1,650
250	Storm Pipe, Roof Drains	33,000	33,000	0	0	33,000	100%	0	1,650
251	Install Storm/Roof Drains	30,000	22,000	8,000	0	30,000	100%	0	1,500
252	Domestic Water Piping	20,000	20,000	0	0	20,000	100%	0	1,000
253	Install Domestic Piping	36,000	36,000	0	0	36,000	100%	0	1,800
254	Insulation (SUB)	20,000	10,000	10,000	0	20,000	100%	0	1,000
255	Heat Trace	25,000	18,750	0	0	18,750	75%	6,250	938
256	Install Heat Trace	10,000	7,500	0	0	7,500	75%	2,500	375
257	Water Heater	15,000	0	15,000	0	15,000	100%	0	750
258	Install Water Heater	8,000	0	0	0	0	0%	8,000	0
259	Gas Piping	7,000	7,000	0	0	7,000	100%	0	350
260	Install Gas Piping	8,000	5,040	0	0	5,040	63%	2,960	252
261	Air Compressor	5,000	0	0	0	0	0%	5,000	0
262	Install Air Compressor	1,000	0	0	0	0	0%	1,000	0

Continuation Sheet

Contractor: W.J. Mountford Co.
170 Commerce Way
South Windsor, CT 06074

Project: New Firehouse #3
163 Church Ave
Bristol, CT 06010

APPLICATION NO: 11
APPLICATION DATE: 10/14/2025
PERIOD TO: 9/30/2025
ARCHITECT'S PROJECT NO:

A	B	C	D	E	F	G		H	I
			WORK COMPLETED						
ITEM NO.	DESCRIPTION OF WORK	SCHEDULED VALUE	FROM PREVIOUS APPLICATION *(D + E)*	THIS PERIOD	MATERIALS PRESENTLY STORED *(Not in D or E)*	TOTAL COMPLETED AND STORED TO DATE *(D+E+F)*	% *(G ÷ C)*	BALANCE TO FINISH *(C - G)*	RETAINAGE *(If variable rate)*
263	Air Comp Piping	8,000	6,080	0	0	6,080	76%	1,920	304
264	Install Air Compressor Piping	10,000	5,000	0	0	5,000	50%	5,000	250
265	Fixtures	75,000	30,000	0	0	30,000	40%	45,000	1,500
266	Install Fixtures	20,000	4,000	0	0	4,000	20%	16,000	200
267	BackFlow Preventer	2,000	2,000	0	0	2,000	100%	0	100
268	Install Backflow	1,000	0	0	0	0	0%	1,000	0
269	Trench Drains	10,000	10,000	0	0	10,000	100%	0	500
270	Install Trench Drains	8,000	0	8,000	0	8,000	100%	0	400
271	Air and Water Hoses	10,000	0	0	0	0	0%	10,000	0
272	Install A&W Hoses	5,000	0	0	0	0	0%	5,000	0
273	Closeout	3,000	0	0	0	0	0%	3,000	0
274	**HVAC**			0					
275	Submittals	6,000	6,000	0	0	6,000	100%	0	300
276	Mobilization	3,000	3,000	0	0	3,000	100%	0	150
277	Trane Equipment	192,000	192,000	0	0	192,000	100%	0	9,600
278	Install Trane Equipment	30,000	27,000	0	0	27,000	90%	3,000	1,350
279	Ref Piping	28,000	28,000	0	0	28,000	100%	0	1,400
280	Install Ref Piping	42,000	37,800	0	0	37,800	90%	4,200	1,890
281	Vehicle Exhaust	65,000	0	0	0	0	0%	65,000	0
282	Rigging	10,000	10,000	0	0	10,000	100%	0	500
283	Hoods/Fans/Hood Duct	50,000	50,000	0	0	50,000	100%	0	2,500
284	Install Hood/Fans/Duct	20,000	5,000	15,000	0	20,000	100%	0	1,000
285	Insullation (SUB)	40,000	0	20,000	0	20,000	50%	20,000	1,000
286	Ductwork	60,000	0	45,000	0	45,000	75%	15,000	2,250
287	Install Ductwork	45,000	0	35,000	0	35,000	78%	10,000	1,750
288	Unit Heaters	10,000	0	10,000	0	10,000	100%	0	500
289	Install Unit Heaters	6,000	0	0	0	0	0%	6,000	0
290	Electric Heaters	5,000	5,000	0	0	5,000	100%	0	250

Continuation Sheet

Contractor: W.J. Mountford Co.
170 Commerce Way
South Windsor, CT 06074

Project: New Firehouse #3
163 Church Ave
Bristol, CT 06010

APPLICATION NO: 11
APPLICATION DATE: 10/14/2025
PERIOD TO: 9/30/2025
ARCHITECT'S PROJECT NO:

A	B	C	D	E	F	G		H	I
			WORK COMPLETED						
ITEM NO.	DESCRIPTION OF WORK	SCHEDULED VALUE	FROM PREVIOUS APPLICATION *(D + E)*	THIS PERIOD	MATERIALS PRESENTLY STORED *(Not in D or E)*	TOTAL COMPLETED AND STORED TO DATE *(D+E+F)*	% *(G ÷ C)*	BALANCE TO FINISH *(C - G)*	RETAINAGE *(If variable rate)*
291	Install Electric Heaters	3,000	0	0	0	0	0%	3,000	0
292	Exhaust Fans	6,000	6,000	0	0	6,000	100%	0	300
293	Install Exhaust Fans	3,000	0	0	0	0	0%	3,000	0
294	Registers	4,000	0	0	0	0	0%	4,000	0
295	Install Registers	5,000	0	0	0	0	0%	5,000	0
296	Louvers	6,000	0	6,000	0	6,000	100%	0	300
297	Install Louvers	4,000	0	0	0	0	0%	4,000	0
298	Controls (SUB)			0					
299	Submittals	15,000	15,000	0	0	15,000	100%	0	750
300	Engineering	20,000	10,500	9,500	0	20,000	100%	0	1,000
301	Programing	29,720	3,500	0	0	3,500	12%	26,220	175
302	Control Devices - Material	37,980	0	20,000	0	20,000	53%	17,980	1,000
303	Control Devices - Labor	35,000	0	20,000	0	20,000	57%	15,000	1,000
304	Rough Wiring - Material	50,000	39,000	0	0	39,000	78%	11,000	1,950
305	Rough Wiring - Labor	69,300	51,000	4,000	0	55,000	79%	14,300	2,750
306	Technical Labor	25,000	0	0	0	0	0%	25,000	0
307	Checkout	8,000	0	0	0	0	0%	8,000	0
308	Air Balance	7,000	0	0	0	0	0%	7,000	0
309	Closeout	5,000	0	0	0	0	0%	5,000	0

Continuation Sheet

Contractor: W.J. Mountford Co.
170 Commerce Way
South Windsor, CT 06074

Project: New Firehouse #3
163 Church Ave
Bristol, CT 06010

APPLICATION NO: 11
APPLICATION DATE: 10/14/2025
PERIOD TO: 9/30/2025
ARCHITECT'S PROJECT NO:

A	B	C	D	E	F	G		H	I
			WORK COMPLETED						
ITEM NO.	DESCRIPTION OF WORK	SCHEDULED VALUE	FROM PREVIOUS APPLICATION *(D + E)*	THIS PERIOD	MATERIALS PRESENTLY STORED *(Not in D or E)*	TOTAL COMPLETED AND STORED TO DATE *(D+E+F)*	% *(G ÷ C)*	BALANCE TO FINISH *(C - G)*	RETAINAGE *(If variable rate)*
310	**Electrical**			0					
311	Mobilization/Temp Power/Permit	7,000	7,000	0	0	7,000	100%	0	350
312	Conduit/Material	20,000	16,000	4,000	0	20,000	100%	0	1,000
313	Electrical Distribution Gear Material	86,000	68,800	17,200	0	86,000	100%	0	4,300
314	Electrical Distribution Gear Labor	57,400	28,700	20,090	0	48,790	85%	8,610	2,440
315	New Service Material - Conduit/Wires	25,000	12,500	8,750	0	21,250	85%	3,750	1,063
316	New Service Labor	17,000	8,500	5,950	0	14,450	85%	2,550	723
317	Power Rough Wiring - Material	80,000	64,000	12,000	0	76,000	95%	4,000	3,800
318	Power Rough Wiring - Labor	120,000	96,000	18,000	0	114,000	95%	6,000	5,700
319	Lighting Fixtures - Material	135,850	135,850	0	0	135,850	100%	0	6,793
320	Lighting Fixtures - Rough Wiring - Labor	40,000	24,000	10,000	0	34,000	85%	6,000	1,700
321	Install Light Fixtures - Labor	40,000	0	0	0	0	0%	40,000	0
322	Fire Alarm - Material	25,000	5,000	7,500	0	12,500	50%	12,500	625
323	Fire Alarm - Labor	16,000	3,200	4,800	0	8,000	50%	8,000	400
324	TEL/DATA Comm - Material	30,300	6,060	9,090	0	15,150	50%	15,150	758
325	TEL/DATA Comm - Labor	18,500	3,700	5,550	0	9,250	50%	9,250	463
326	AV, Security, CCTV, Access - Material	55,000	0	13,750	0	13,750	25%	41,250	688
327	AV, Security, CCTV, Access - Labor	16,000	0	6,400	0	6,400	40%	9,600	320
328	Site Lighting Material - Conduit/Wires	8,500	0	0	0	0	0%	8,500	0
329	Site Lighting Labor	6,500	0	0	0	0	0%	6,500	0
330	Finish Devices	4,000	0	0	0	0	0%	4,000	0
331	Electrical Distribution Study	5,500	0	0	0	0	0%	5,500	0

Continuation Sheet

Contractor: W.J. Mountford Co.
170 Commerce Way
South Windsor, CT 06074

Project: New Firehouse #3
163 Church Ave
Bristol, CT 06010

APPLICATION NO: 11
APPLICATION DATE: 10/14/2025
PERIOD TO: 9/30/2025
ARCHITECT'S PROJECT NO:

A	B	C	D	E	F	G		H	I
			WORK COMPLETED						
ITEM NO.	DESCRIPTION OF WORK	SCHEDULED VALUE	FROM PREVIOUS APPLICATION *(D + E)*	THIS PERIOD	MATERIALS PRESENTLY STORED *(Not in D or E)*	TOTAL COMPLETED AND STORED TO DATE *(D+E+F)*	% *(G ÷ C)*	BALANCE TO FINISH *(C - G)*	RETAINAGE *(If variable rate)*
CO 01	PCO 001 Delete Foundation Damproofing	(4,270)	(4,270)	0	0	(4,270)	100%	0	(214)
CO 01	PCO 006 Addiitonal Rigid Insulation	4,805	4,805	0	0	4,805	100%	0	240
CO 02	PCO 002R2 Remove (2) Asphalt Diveways	4,466	4,466	0	0	4,466	100%	0	223
CO 02	PCO 004 Remove (3) Apparatus Doors & Replace	(101,000)	0	0	0	0	0%	(101,000)	0
CO 02	PCO 005R Install Stone at Dry Well Structure	2,116	2,116	0	0	2,116	100%	0	106
CO 02	PCO 007 Removal Fill and Replace	10,487	10,487	0	0	10,487	100%	0	524
CO 03	PCO 010 Credit for Stock Wheel Guards	(3,553)	0	0	0	0	0%	(3,553)	0
CO 03	PCO 011R Add (2) Floor Outlets in Exercise Rm	3,459	1,500	0	0	1,500	43%	1,959	75
CO 03	PCO 013 Adjust Storefront Frames to 6"	9,202	9,202	0	0	9,202	100%	0	460
CO 03	PCO 014 Post Painting of Storefront Brake Metal	4,480	0	0	0	0	0%	4,480	0
CO 03	PCO 015 Credit to Delete Two Wheel Guards	(1,117)	0	0	0	0	0%	(1,117)	0
CO 03	PCO 016 Exterior Signage Revisions	2,354	0	0	0	0	0%	2,354	0
CO 03	PCO 017 Remove Existing Buried Concrete	3,788	3,788	0	0	3,788	100%	0	189
CO 03	PCO N/A Credit for Deletion of Decorative Steel	(5,000)	0	0	0	0	0%	(5,000)	0
CO 04	PCO 018 Add Bacnet Controls to Kitchen Hood	3,684	0	0	0	0	0%	3,684	0
CO 04	PCO 019 VRF-5 Change Circuit Breaker	873	0	0	0	0	0%	873	0
CO 04	PCO 021 Option 02 - EV Charging Revisions	(3,630)	0	0	0	0	0%	(3,630)	0
CO 05	PCO 012 Misc. Steel Details	8,827	0	8,827	0	8,827	100%	0	441
CO 05	PCO 022R Revised Sanitary Sewer Main Revisions	(7,298)	0	(7,298)	0	(7,298)	100%	0	(365)
CO 05	PCO 023 Step-Up Transformer Gear Dryer	5,785	0	0	0	0	0%	5,785	0
CO 05	PCO 024 Overhead Door Glass Revisions	(17,661)	0	0	0	0	0%	(17,661)	0
CO 05	PCO 025 Delete All Wheel Guards	(10,049)	0	0	0	0	0%	(10,049)	0
CO 05	PCO 026 Boulders/Rock Removal	2,791	0	2,791	0	2,791	100%	0	140
CO 05	PCO 027 Subsurface Drainage for Downspouts	13,455	0	0	0	0	0%	13,455	0
CO 05	PCO 028 Shower 109 + 111 Revisions	8,115	0	8,115	0	8,115	100%	0	406
CO 05	PCO 029 Two Exterior PA System Speakers	2,890	0	1,200	0	1,200	42%	1,690	60
CO 05	PCO 030 Audio Visual System Revisions	(8,790)	0	0	0	0	0%	(8,790)	0
CO 05	PCO 031 Aluminum Door Hardware Revisions	4,045	0	0	0	0	0%	4,045	0
	TOTAL	**6,696,254**	**3,928,770**	**743,813**	**0**	**4,672,583**	**70%**	**2,023,671**	**233,629**

Project: 337 Bristol Firehouse #3 **PCO LOG**

Last Updated: 10/13/2025

PR #	Cost Code	PCO#	CO #	Description	Total Amount	Approved Amount	Date Submitted	Date Approved	Status
		001	1	Delete Foundation Damproofing	(4,270)	(4,270)	1/7/2025	01/25/25	Approved
	17A	002R2	2	2nd Revision Remove Additional Asphalt	4,466	4,466	01/29/25	02/17/25	Approved
	17B	003R	N/A	Revised Additional Rear Concrete	52,387		04/14/25		Rejected
		004	2	Overhead Door Changes	(101,000)	(101,000)	12/18/24	02/17/25	Approved
	17C	005R	2	Install Stone at existing buried Structure	2,116	2,116.00	12/18/24	02/17/25	Approved
	17D	006	1	Additional Rigid Insulation	4,805	4,805.00	12/30/24	01/25/25	Approved
	17E	007	2	Additional Structural Fill	10,487	10,487	01/21/25	02/17/25	Approved
	N/A	008	N/A	Custom Storefront Color	23,754	-	03/06/25	03/15/25	Rejected
	N/A	009	N/A	Add 6" Tee and Cap to Fire Service	2,634	-	03/21/25	04/02/25	Rejected
	51200	010	3	Credit for Stock Wheel Guards	(3,553)	(3,553)	03/26/25	03/31/25	Approved
	17G	011R	3	Rev. - Add (2) Floor Outlets Exercise Rm	3,459	-	04/07/25	04/23/25	Approved
	17H	012	5	Misc Steel Details	8,827	8,827	03/27/25	10/07/25	Approved
	17I	013	3	Storefront Frames Change to 6"	9,202	-	03/31/25	04/23/25	Approved
	17J	014	3	Storefront Breakmetal Post Painting	4,480		04/01/25	04/23/25	Approved
	51200	015	3	Delete Two Wheel Guards	(1,117)		04/21/25	04/23/25	Approved
	17K	016	3	Exterior Signage Revisions	2,354		04/21/25	04/23/25	Approved
	17L	017	3	Remove Concrete/Fill Well Near CB #1-6	3,788		04/21/25	04/23/25	Approved
	17M	018	4	Add Bacnet Controls to Kitchen Hood	3,684		04/23/25		Approved
	17N	019	4	VRF -5 Change Circuit Breaker	873		04/28/25		Approved
		N/A	3	Delete the AX Allowance $5,000	(5,000)		N/A	04/23/25	Approved
		020	N/A	Option 01 - EV Charging Revisions	(3,779)		05/22/25		Rejected
		021	4	Option 02 - EV Charging Revisions	(3,630)		05/22/25		Approved
		022R	5	Revised Sanitary Sewer Main Revisions	(7,298)	(7,928)	08/18/25	10/07/25	Approved
	17O	023	5	Step-Up Transformer Gear Dryer	5,785	5,785	06/23/25	08/27/25	Approved
		024	5	OH Door Glass Revisions	(17,661)	(17,661)	07/02/25	08/27/25	Approved
		025	5	Delete All Wheel Guards	(10,049)	(10,049)	08/18/25	08/27/25	Approved
	17P	026	5	Boulders 1cy+ / Rock Removal CB 1-2	2,791	2,791	08/18/25	10/07/25	Approved
	17Q	027	5	Subsurface Drainage for Downspouts	13,455	13,455	08/18/25	08/27/25	Approved
	17R	028	5	Shower 109 + 111 Wall Revisions	8,115	8,115	08/18/25	08/27/25	Approved
	17S	029	5	Two Exterior PA System Speakers	2,890	2,890	08/25/25	08/27/25	Approved
		030	5	Audio Visual System Revisions	(8,790)	(8,790)	08/25/25	08/27/25	Approved
	17T	031	5	Aluminum door Hardware Revisions	4,045	4,045	08/27/25	10/07/25	Approved
		032		Acc. Con./AV Equip, Solar Light Credit	(4,607)		10/06/25		Under Review
	17U	033		Exterior Spkr Control, Type F2 Light	2,569		10/13/25		Under Review
	17V	034		VRF-1 + KEF-1 Support, Venner Support, Dr 107 Louver + Delete Attic Plywood	3,887		10/13/25		Under Review
	17W	035		Main Entry Roof Pitch Revisions	6,919		10/10/25		Under Review
		036		Credit Install of Owner Furnished Equip.	(1,871)		10/13/25		Under Review

		C.O. Running	Contract Running
Original Contract	**6,763,000**	Total	Total
Change Order #1	535.00	535.00	6,763,535.00
Change Order #2	-83,931.00	-83,396.00	6,679,604.00
Change Order #3	13,613.00	-69,783.00	6,693,217.00
Change Order #4	927.00	-68,856.00	-68,856.00
Change Order #5	2,110.00	-66,746.00	6,696,254.00

Pending Pricing:

				Relocate existing bell					
				Various Revisions for Revised A500 dwgs					
				BMS Work Station Credit??					
				Digital Wall Graphic Revisions					
				Aluminum Canopy over Dr #103					
				OH Door Bolt Removal + Welding					
				Credit (7) Bollards					
				Credit Fence Revisions					

W. J. MOUNTFORD CO.
GENERAL CONTRACTOR • CONSTRUCTION MANAGER
170 Commerce Way, South Windsor, CT 06074, (860) 291-9448, Fax (860) 289-6382
License #00900574 • www.wjmountford.com

Bristol Firehouse #3
163 Church Ave
Bristol, CT

Date: 10-06-25

PCO 032 - Credit for Video Surveillance NVR5 Camera Work Station.
- Credit for Access Control key FOBS.
- Credit for Access Control Avigilon Mercury Acces System UA7 Appliance.
- Credit Solar Flagpole Light

ITEM	QTY	UNIT	RATE	MATERIAL	RATE	LABOR
Subcontractors	-	-	-	-	-	-
Hannah Electric (See Attached)	(1)	lot	1,540.00	(1,540)		
Hannah Electric (See Attached)	(1)	lot	363.75	(364)		
Hannah Electric (See Attached)	(1)	lot	2,385.00	(2,385)		
Total Subcontractor Work				(4,289)		
W.J. Mountford Work	-	-	-	-	-	-
				-	-	-
	-	ea.	-	-		-
- Materials/Equipment	-	-	-	-	-	-
Delete Solar Flagpole Light	(1)	ea.	250.00	(250)	-	-
Total WJM Work				(250)		-

Total Subcontractors	$	(4,289)
WJM 10% O+P on Subcontractors	$	-
Total W. J. Mountford Work	$	(250)
15% Mark-up on Our Work	$	-
Additional Bond Costs	$	(68)
Total Change Order Request	**$**	**(4,607)**

This Change Order Deducts $4,607.00 from our contract amount and 0 days to the date of substantial completion.

Very Truly Yours,
W. J. MOUNTFORD, CO.

Leo Desautels
Vice President

HANNA ELECTRIC INC.
Electrical Contractors

PO Box 588, Dennis Port, MA 02639
P. (860) 698-6778
CT #189922 MA #20191A
info@hannaelectricinc.com
www.hannaelectricinc.com

CT License #189922 E1 MA License #20191A

State of CT SBE / WBE / MBE / AA / OA

Change Order Proposal #8212218

9/29/2025

TO:

W. J. Mountford Co.
170 Commerce Way

South Windsor, CT, 06074

JOB: Bristol Fire Station No.3 CO 10 Camera System

HEI Change Order Number 8212218

Work Description: Credit for not furnishing the Avigilon Camera System NVR workstation not needed

Our total amount for this change order is: $-1,540.00

Attached are the following supporting reports:

- **Extensions** (Material quantities, prices and labor units with extended totals)
- **Summary Totals** (recap sheet)

Sincerely,

Larry Hanna, VP

Larry Hanna
larryhanna@hannaelectricinc.com

Bristol New Fire Station #3 : Bristol Fire Station No.3 CO 10 Camera System
Totals (Detailed) - Bid Summary: Default

Job Number	8212218
Bid Date	10/2/2024
Bid Time	10:42:00 AM
Job Location	Bristol Fire Station #3
Square Footage	8,900

Quoted Material

6763 - Credit for not furnishing the Avigilon Camera System NVR workstatio		1.00	-$1,540.00	-$1,540.00
7 - Security (Supplier #1)				-$1,540.00
Total				**-$1,540.00**
Sales Tax (0.00%)				**$0.00**
Total Material				**-$1,540.00**

Labor Hours

Division	Extended
Direct Labor Hours (Lump sum)	**0.00**

Labor Rates

Category	% of Total	Hours	Base Rate	Burden $	Burden %	Extended
Total	100.000	0.000	x $0.00	(average of labor rate w/burden) =		**$0.00**

Non-Productive Labor

Description	Hours	Rate	Factor	Extended
Total				**$0.00**
Total Labor (0.00 hours)				**$0.00**
Job Subtotal (Prime Cost)				**-$1,540.00**
Overhead (0.00%)				**0.00**
Profit (0.00%)				**0.00**
Job Total				**-$1,540.00**
Actual Bid Price				**-$1,540.00**
Material to Direct Labor ratio: 1.00				
Prime Cost per square foot				**-$0.17**
Job Total per square foot				**-$0.17**
Actual Bid Price per square ft				**-$0.17**

Labor cost per square foot	**$0.00**
Labor hours per square foot	**0.00**
Gross Profit %	**0.00**
Gross Profit $	**$0.00**
Net Profit %	**0.00**

Bristol New Fire Station #3 : Bristol Fire Station No.3 CO 10 Camera System

Job Number: 8212218

Bid Summary: Default

Extension By Phase

Item #	Description	Quantity	Price	U	Ext Price	Labor Hr	U	Ext Lab Hr	Lab F
	--- 08 Special Systems ---								
6763	Credit for not furnishing the Avigilon Camera System N	1	QUOTE	7	0.00	0.01	E	0.01	
	--- 08 Special Systems Total ---				0.00			0.01	
	Job Total				0.00			0.01	

* Trade Price, Labor column 3

HANNA ELECTRIC INC.
Electrical Contractors

PO Box 588, Dennis Port, MA 02639
P. (860) 698-6778
CT #189922 MA #20191A
info@hannaelectricinc.com
www.hannaelectricinc.com

CT License #189922 E1 MA License #20191A

State of CT SBE / WBE / MBE / AA / OA

Change Order Proposal #8212216 REVISED

9/29/2025

TO:

W. J. Mountford Co.
170 Commerce Way
South Windsor, CT, 06074

JOB: Bristol Fire Station #3 CO 08 Credit for 25 entry access proximity fobs

HEI Change Order Number 8212216

Work Description: Credit for not furnishing 25 Avigilon Mercury Access System proximity fobs for the entry access system. The town of Bristol will be reprogramming all of their existing ones.

Our total amount for this change order is: -$363.75

Equipment breakout is as follows:

QTY	Device	Amount
25	AC-HID-FOB-PROXKEYIII-CL ProxyKey III Proximity Access keyfob	-$363.75

Sincerely,

Larry Hanna, VP

Larry Hanna
larryhanna@hannaelectricinc.com

Bristol New Fire Station #3 : Bristol Fire Station No.3 Credit For Access Fobs
Totals (Detailed) - Bid Summary: Default

Job Number	8212216
Bid Date	10/2/2024
Bid Time	10:42:00 AM
Job Location	Bristol Fire Station #3
Square Footage	8,900

Quoted Material

6756 - Avigilon Mercury Access System Proximity Fob		25.00	-$14.55	-$363.75
7 - Security (Supplier #1)				-$363.75
Total				**-$363.75**
Sales Tax (0.00%)				**$0.00**
Total Material				**-$363.75**

Labor Hours

Division	Extended
Direct Labor Hours (Lump sum)	**0.00**

Labor Rates

Category	% of Total	Hours	Base Rate	Burden $	Burden %	Extended
Total	100.000	0.000	x $0.00	(average of labor rate w/burden) =		**$0.00**

Non-Productive Labor

Description	Hours	Rate	Factor	Extended
Total				**$0.00**
Total Labor (0.00 hours)				**$0.00**
Job Subtotal (Prime Cost)				**-$363.75**
Overhead (0.00%)				**0.00**
Profit (0.00%)				**0.00**
Job Total				**-$363.75**
Actual Bid Price				**-$363.75**
Material to Direct Labor ratio: 1.00				
Prime Cost per square foot				**-$0.04**
Job Total per square foot				**-$0.04**
Actual Bid Price per square ft				**-$0.04**

Bristol New Fire Station #3 : Bristol Fire Station No.3 Credit For Access Fobs
Totals (Detailed) - Bid Summary: Default

Labor cost per square foot	**$0.00**
Labor hours per square foot	**0.00**
Gross Profit %	**0.00**
Gross Profit $	**$0.00**
Net Profit %	**0.00**

Bristol New Fire Station #3 : Bristol Fire Station No.3 Credit For Access Fobs
Job Number: 8212216
Bid Summary: Default
Extension By Phase

Item #	Description	Quantity	Price	U	Ext Price	Labor Hr	U	Ext Lab Hr	Lab F
	--- 08 Special Systems ---								
6756	Avigilon Mercury Access System Proximity Fob	25	QUOTE	7	0.00	0.01	E	0.25	
	--- 08 Special Systems Total ---				0.00			0.25	
	Job Total				0.00			0.25	

* Trade Price, Labor column 3

HANNA ELECTRIC INC.
Electrical Contractors

PO Box 588, Dennis Port, MA 02639
P. (860) 698-6778
CT #189922 MA #20191A
info@hannaelectricinc.com
www.hannaelectricinc.com

CT License #189922 E1 MA License #20191A

State of CT SBE / WBE / MBE / AA / OA

Change Order Proposal #8212217

9/29/2025

TO:

W. J. Mountford Co.
170 Commerce Way
South Windsor, CT, 06074

JOB: Bristol Fire Station No.3 Credit for the Avigilon Mercury Access System UA7 Appliance

HEI Change Order Number 8212217

Work Description: Credit for the Avigilon Mercury Access System UA-APP-ENT-7 UA7 enterprise Appliance not needed

Our total amount for this change order is: $-2,385.00

Attached are the following supporting reports:

- **Extensions** (Material quantities, prices and labor units with extended totals)
- **Summary Totals** (recap sheet)

Sincerely,

Larry Hanna, VP

Larry Hanna
larryhanna@hannaelectricinc.com

Bristol New Fire Station #3 : Bristol Fire Station No.3 Credit for UA7 Appliance
Totals (Detailed) - Bid Summary: Default

Job Number	8212217
Bid Date	10/2/2024
Bid Time	10:42:00 AM
Job Location	Bristol Fire Station #3
Square Footage	8,900

Quoted Material

6764 -	Avigilon Mercury Access System UA-APP-ENT-7 UA7 enterprise Appl	1.00	-$2,385.00	-$2,385.00
7 - Security (Supplier #1)				-$2,385.00
Total				**-$2,385.00**
Sales Tax (0.00%)				**$0.00**
Total Material				**-$2,385.00**

Labor Hours

Division	Extended
Direct Labor Hours (Lump sum)	**0.00**

Labor Rates

Category	% of Total	Hours	Base Rate	Burden $	Burden %	Extended
Total	100.000	0.000	x $0.00	(average of labor rate w/burden) =		**$0.00**

Non-Productive Labor

Description	Hours	Rate	Factor	Extended
Total				**$0.00**

Total Labor (0.00 hours)	**$0.00**
Job Subtotal (Prime Cost)	**-$2,385.00**
Overhead (0.00%)	**0.00**
Profit (0.00%)	**0.00**
Job Total	**-$2,385.00**
Actual Bid Price	**-$2,385.00**
Material to Direct Labor ratio: 1.00	
Prime Cost per square foot	**-$0.27**
Job Total per square foot	**-$0.27**
Actual Bid Price per square ft	**-$0.27**

Labor cost per square foot	**$0.00**
Labor hours per square foot	**0.00**
Gross Profit %	**0.00**
Gross Profit $	**$0.00**
Net Profit %	**0.00**

Bristol New Fire Station #3 : Bristol Fire Station No.3 Credit for UA7 Appliance
Job Number: 8212217
Bid Summary: Default
Extension By Phase

Item #	Description	Quantity	Price	U	Ext Price	Labor Hr	U	Ext Lab Hr	Lab F
	--- 08 Special Systems ---								
6764	Avigilon Mercury Access System UA-APP-ENT-7 UA7	1	QUOTE	7	0.00	0.01	E	0.01	
	--- 08 Special Systems Total ---				0.00			0.01	
	Job Total				0.00			0.01	

* Trade Price, Labor column 3

Leo Desautels

From: Leo Desautels
Sent: Monday, October 6, 2025 12:39 PM
To: Leo Desautels
Subject: RE: Bristol Firehouse #3 Flagpole

From: Kingen, Linsey <linsey@morgan-francis.com>
Sent: Thursday, September 4, 2025 4:10 PM
To: Leo Desautels <ldesautels@wjmountford.com>
Subject: Re: Bristol Firehouse #3 Flagpole

Hi Leo,
The savings to delete the Solar Disk Light from the Bristol Firehouse #3 flagpole scope is $250.
If you have any questions please let me know.
Thank you!

Linsey Kingen

Morgan-Francis Flagpoles

3410 N Walnut St.

Muncie, IN. 47303

Office Phone 800-814-9568

Office Fax 877-637-6537

W. J. MOUNTFORD CO.
GENERAL CONTRACTOR • CONSTRUCTION MANAGER
170 Commerce Way, South Windsor, CT 06074, (860) 291-9448, Fax (860) 289-6382
License #00900574 • www.wjmountford.com

Bristol Firehouse #3
163 Church Ave
Bristol, CT

Date: 10-13-25

PCO 033 - Add volume control switch in Watch Room fo (3) exterior speakers.
- Add one Type F2 light fixtute in the Janitor's Closet per RFI Roof Hatch Location response.

ITEM	QTY	UNIT	RATE	MATERIAL	RATE	LABOR
Subcontractors	-	-	-	-	-	-
Hannah Electric (See Attached)	1	lot	1,758.73	1,759		
Hannah Electric (See Attached)	1	lot	541.94	542		
Total Subcontractor Work				2,301		
W.J. Mountford Work	-	-	-	-	-	-
				-	-	-
	-	ea.	-	-		-
- Materials/Equipment	-	-	-	-	-	-
		ea.		-	-	-
				---		---
Total WJM Work				-		-

Total Subcontractors	$	2,301
WJM 10% O+P on Subcontractors	$	230
Total W. J. Mountford Work	$	-
15% Mark-up on Our Work	$	-
Additional Bond Costs	$	38
Total Change Order Request	**$**	**2,569**

This Change Order Adds $2,569.00 to our contract amount and 1 days to the date of substantial completion.

Very Truly Yours,
W. J. MOUNTFORD, CO.

Leo Desautels
Vice President

HANNA ELECTRIC INC.
Electrical Contractors

PO Box 588, Dennis Port, MA 02639
P. (860) 698-6778
CT #189922 MA #20191A
info@hannaelectricinc.com
www.hannaelectricinc.com

CT License #189922 E1 MA License #20191A

State of CT SBE / WBE / MBE / AA / OA

Change Order Proposal #8212219

9/29/2025

TO:

W. J. Mountford Co.
170 Commerce Way
South Windsor, CT, 06074

JOB: Bristol Fire Station CO 11 Volume Control

HEI Change Order Number 8212219

Work Description: Volume control for all three exterior speakers

Our total amount for this change order is: $1,758.73

Attached are the following supporting reports:

- **Extensions** (Material quantities, prices and labor units with extended totals)
- **Summary Totals** (recap sheet)

Sincerely,

Larry Hanna, VP

Larry Hanna
larryhanna@hannaelectricinc.com

Bristol New Fire Station #3 : Bristol Fire Station CO 11 Volume Control
Totals (Detailed) - Bid Summary: Default

Job Number	8212219
Bid Date	10/2/2024
Bid Time	10:42:00 AM
Job Location	Bristol Fire Station #3
Square Footage	8,900

Material Totals

Division	Total	Factor	Extended
01 Raceway, Fittings & Boxes	$26.03	0.00 %	$26.03
10 Voice/Data/Video	219.00	0.00 %	219.00
Total	$245.03		**$245.03**

Quoted Material

1235872 - AtlasIED 250W Attenuator	1.00	$112.50	$112.50
73 - Quote 73 (Supplier #1)			$112.50
Total			**$112.50**
Sales Tax (0.00%)			**$0.00**
Total Material			**$357.53**

Labor Hours

Division	Total	Factor	Extended
01 Raceway, Fittings & Boxes	0.25	0.00 %	0.25
10 Voice/Data/Video	10.60	0.00 %	10.60
Total	10.85		**10.85**

Labor Rates

Category	% of Total	Hours	Base Rate	Burden $	Burden %	Extended
Electrician	100.000	10.850	$108.00	0.00	0.000	$1,171.80
Total	100.000	10.850	x $108.00	(average of labor rate w/burden) =		**$1,171.80**

Non-Productive Labor

Description	Hours	Rate	Factor	Extended
Total				**$0.00**
Total Labor (10.85 hours)				**$1,171.80**
Job Subtotal (Prime Cost)				**$1,529.33**
Overhead (0.00%)				**0.00**

Profit (15.00%)	**229.40**
Job Total	**$1,758.73**
Actual Bid Price	**$1,758.73**
Material to Direct Labor ratio: 0.23	
Prime Cost per square foot	**$0.17**
Job Total per square foot	**$0.20**
Actual Bid Price per square ft	**$0.20**
Labor cost per square foot	**$0.13**
Labor hours per square foot	**0.00**
Gross Profit %	**13.04**
Gross Profit $	**$229.40**
Net Profit %	**13.04**

Bristol New Fire Station #3 : Bristol Fire Station CO 11 Volume Control

Job Number: 8212219

Bid Summary: Default

Extension By Phase

Item #	Description	Quantity	Price	U	Ext Price	Labor Hr	U	Ext Lab Hr	Lab F
	--- 01 Raceway, Fittings & Boxes ---								
6561	Wiremold #5748-2 2G Box/1-3/4"D	1	26.03	E	26.03	0.25	E	0.25	
	--- 01 Raceway, Fittings & Boxes Total ---				26.03			0.25	
	--- 10 Voice/Data/Video ---								
1235464	16/2C Unshielded Cable	500	438.00	M	219.00	20.00	M	10.00	
1235872	AtlasIED 250W Attenuator	1	QUOTE	73	0.00	0.60	E	0.60	
	--- 10 Voice/Data/Video Total ---				219.00			10.60	
	Job Total				245.03			10.85	

* Trade Price, Labor column 3

E408-250

Precision, Plate Mounted 250W Attenuator

Features

- 1.5dB Steps for Sound Masking and Other Precision Applications
- 250 Watt Power Handling
- Rack or Plate Mounting

Applications

- Precise Level Control of Large Sound Masking Zones
- Precise Level Control of Large Paging or BGM Zones

General Description

The E408-250 is specially designed for attenuation in masking and sound reinforcement systems where fine tuning of level control is required. It employs a ten-position, non-shorting rotary switch without stop. The attenuation rate is 1.5dB per step. (All other specifications are the same as the AT Series including the UL listing.)

©2019 Atlas Sound LP. The Atlas "Circle A", Soundolier, and Atlas Sound are trademarks of Atlas Sound L.P. IED is a Registered Trademark of Innovative Electronic Designs LLC. All rights reserved. All other Trademarks are property of their respective owners. No endorsement is implied. Due to continual product development, specifications are subject to change without notice. ATS005923 RevA 1/19

System	
Type	Plate Mounted Attenuator
Total Attenuation	15dB
Power Rating	250 Watts
Mechanical	
Plate Size	2-gang
Plate Type	Stainless Steel
Dimensions and Weight	
Product Dimensions (HxWxD)	W 4.56" x H 4.5" x D 2.51" (116mm x 114mm x 64mm)
Shipping Dimensions (HxWxD)	W 7.875" x H 7.5" x D 3.625" (200mm x 191mm x 92mm)
Net Weight - lbs	1.5lb (0.68kg)
Shipping Weight - lbs	1.79lb (0.81kg)
Agency Approvals	
North America Agency	UL813, UL2043

©2019 Atlas Sound LP. The Atlas "Circle A", Soundolier, and Atlas Sound are trademarks of Atlas Sound L.P. IED is a Registered Trademark of Innovative Electronic Designs LLC. All rights reserved.
All other Trademarks are property of their respective owners. No endorsement is implied. Due to continual product development, specifications are subject to change without notice. ATS005923 RevA 1/19

Dimensional Drawings

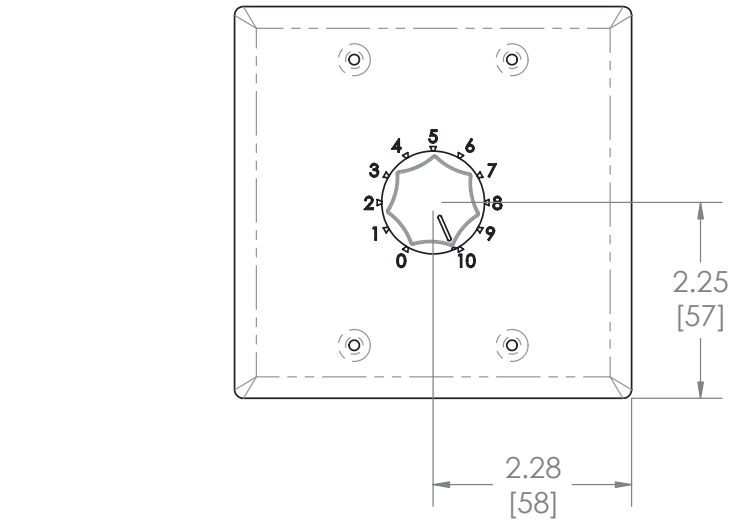

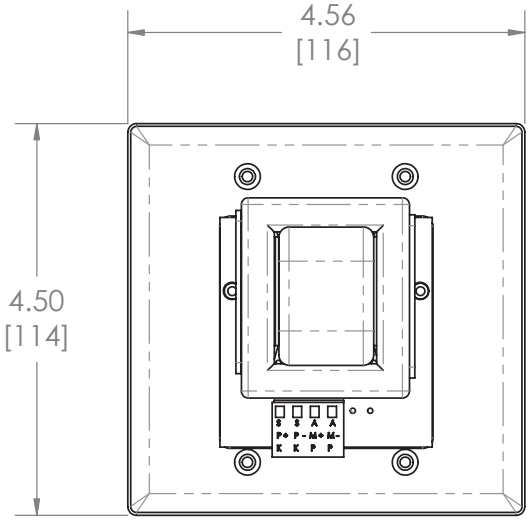

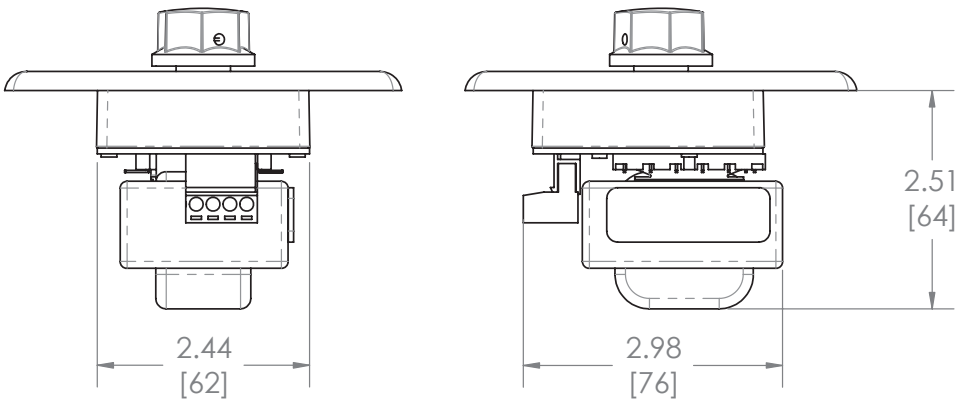

©2019 Atlas Sound LP. The Atlas "Circle A", Soundolier, and Atlas Sound are trademarks of Atlas Sound L.P. IED is a Registered Trademark of Innovative Electronic Designs LLC. All rights reserved.
All other Trademarks are property of their respective owners. No endorsement is implied. Due to continual product development, specifications are subject to change without notice. ATS005923 RevA 1/19

Architect and Engineer Specifications

Plate mounted wall attenuator shall be AtlasIED model E408-250. Attenuator shall be capable of handling up to 250W of RMS power. Attenuator shall have a ten position, non shorting rotary switch design without stops. Total attenuation shall be 15dB with each position adjustment being 1.5dB. Unit shall be both UL813 and UL2043 rated. Attenuator shall be able to be rack mounted or wall mounted with included stainless steel, double gang wall plate. Dimensions shall be W 4.56" x H 4.5" x D 2.51" (116mm x 114mm x 64mm).

©2019 Atlas Sound LP. The Atlas "Circle A", Soundolier, and Atlas Sound are trademarks of Atlas Sound L.P. IED is a Registered Trademark of Innovative Electronic Designs LLC. All rights reserved.
All other Trademarks are property of their respective owners. No endorsement is implied. Due to continual product development, specifications are subject to change without notice. ATS005923 RevA 1/19

E408-250

Precision, Plate Mounted 250W Attenuator

Features

- 1.5dB Steps for Sound Masking and Other Precision Applications
- 250 Watt Power Handling
- Rack or Plate Mounting

Applications

- Precise Level Control of Large Sound Masking Zones
- Precise Level Control of Large Paging or BGM Zones

General Description

The E408-250 is specially designed for attenuation in masking and sound reinforcement systems where fine tuning of level control is required. It employs a ten-position, non-shorting rotary switch without stop. The attenuation rate is 1.5dB per step. (All other specifications are the same as the AT Series including the UL listing.)

©2019 Atlas Sound LP. The Atlas "Circle A", Soundolier, and Atlas Sound are trademarks of Atlas Sound L.P. IED is a Registered Trademark of Innovative Electronic Designs LLC. All rights reserved. All other Trademarks are property of their respective owners. No endorsement is implied. Due to continual product development, specifications are subject to change without notice. ATS005923 RevA 1/19

System	
Type	Plate Mounted Attenuator
Total Attenuation	15dB
Power Rating	250 Watts
Mechanical	
Plate Size	2-gang
Plate Type	Stainless Steel
Dimensions and Weight	
Product Dimensions (HxWxD)	W 4.56" x H 4.5" x D 2.51" (116mm x 114mm x 64mm)
Shipping Dimensions (HxWxD)	W 7.875" x H 7.5" x D 3.625" (200mm x 191mm x 92mm)
Net Weight - lbs	1.5lb (0.68kg)
Shipping Weight - lbs	1.79lb (0.81kg)
Agency Approvals	
North America Agency	UL813, UL2043

©2019 Atlas Sound LP. The Atlas "Circle A", Soundolier, and Atlas Sound are trademarks of Atlas Sound L.P. IED is a Registered Trademark of Innovative Electronic Designs LLC. All rights reserved.
All other Trademarks are property of their respective owners. No endorsement is implied. Due to continual product development, specifications are subject to change without notice. ATS005923 RevA 1/19

Dimensional Drawings

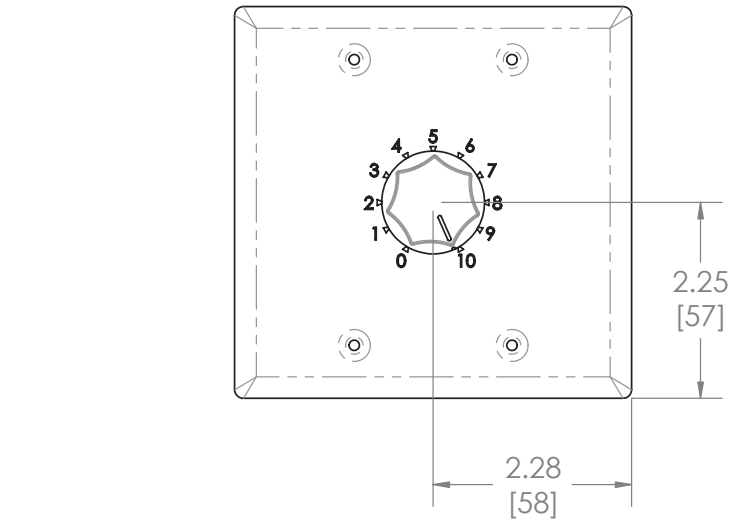

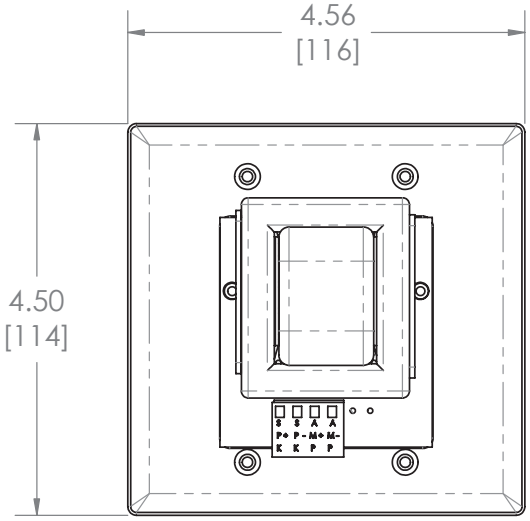

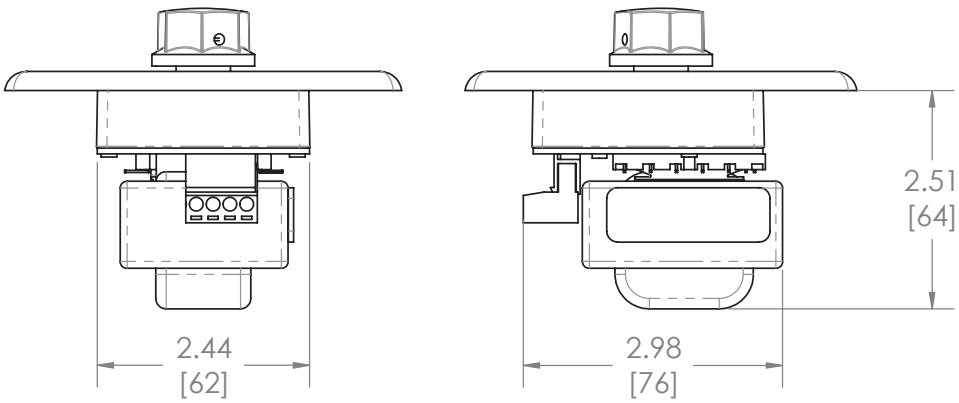

©2019 Atlas Sound LP. The Atlas "Circle A", Soundolier, and Atlas Sound are trademarks of Atlas Sound L.P. IED is a Registered Trademark of Innovative Electronic Designs LLC. All rights reserved.
All other Trademarks are property of their respective owners. No endorsement is implied. Due to continual product development, specifications are subject to change without notice. ATS005923 RevA 1/19

Architect and Engineer Specifications

Plate mounted wall attenuator shall be AtlasIED model E408-250. Attenuator shall be capable of handling up to 250W of RMS power. Attenuator shall have a ten position, non shorting rotary switch design without stops. Total attenuation shall be 15dB with each position adjustment being 1.5dB. Unit shall be both UL813 and UL2043 rated. Attenuator shall be able to be rack mounted or wall mounted with included stainless steel, double gang wall plate. Dimensions shall be W 4.56" x H 4.5" x D 2.51" (116mm x 114mm x 64mm).

©2019 Atlas Sound LP. The Atlas "Circle A", Soundolier, and Atlas Sound are trademarks of Atlas Sound L.P. IED is a Registered Trademark of Innovative Electronic Designs LLC. All rights reserved.
All other Trademarks are property of their respective owners. No endorsement is implied. Due to continual product development, specifications are subject to change without notice. ATS005923 RevA 1/19

HANNA ELECTRIC INC.
Electrical Contractors

PO Box 588, Dennis Port, MA 02639
P. (860) 698-6778
CT #189922 MA #20191A
info@hannaelectricinc.com
www.hannaelectricinc.com

CT License #189922 E1 MA License #20191A

State of CT SBE / WBE / MBE / AA / OA

Change Order Proposal #8212221

10/2/2025

TO:

W. J. Mountford Co.
170 Commerce Way
South Windsor, CT, 06074

JOB: Bristol Fire Station #3 CO 12 New F2 Fixture

HEI Change Order Number 8212221

Work Description: New F2 type fixture in Janitor's Closet

Our total amount for this change order is: $541.94

Attached are the following supporting reports:

- **Extensions** (Material quantities, prices and labor units with extended totals)
- **Summary Totals** (recap sheet)

Sincerely,

Larry Hanna, VP

Larry Hanna
larryhanna@hannaelectricinc.com

Bristol New Fire Station #3 : Bristol Fire Station #3 CO 12 New F2 Fixture
Totals (Detailed) - Bid Summary: Default

Job Number	8212221
Bid Date	10/2/2024
Bid Time	10:42:00 AM
Job Location	Bristol Fire Station #3
Square Footage	8,900

Quoted Material

F2 - L.E.D. Recessed 2x2 Fixture	1.00	$471.25	$471.25
1 - Fixtures (Supplier #1)			$471.25
Total			**$471.25**
Sales Tax (0.00%)			**$0.00**
Total Material			**$471.25**

Labor Hours

Division	Total	Factor	Extended
04 Light Fixtures & Lamps	0.00	0.00 %	0.00
Total	0.00		**0.00**

Labor Rates

Category	% of Total	Hours	Base Rate	Burden $	Burden %	Extended
Total	100.000	0.000	x $0.00	(average of labor rate w/burden) =		**$0.00**

Non-Productive Labor

Description	Hours	Rate	Factor	Extended
Total				**$0.00**
Total Labor (0.00 hours)				**$0.00**
Job Subtotal (Prime Cost)				**$471.25**
Overhead (0.00%)				**0.00**
Profit (15.00%)				**70.69**
Job Total				**$541.94**
Actual Bid Price				**$541.94**
Material to Direct Labor ratio: 1.00				
Prime Cost per square foot				**$0.05**

Bristol New Fire Station #3 : Bristol Fire Station #3 CO 12 New F2 Fixture
Totals (Detailed) - Bid Summary: Default

Job Total per square foot	**$0.06**
Actual Bid Price per square ft	**$0.06**
Labor cost per square foot	**$0.00**
Labor hours per square foot	**0.00**
Gross Profit %	**13.04**
Gross Profit $	**$70.69**
Net Profit %	**13.04**

Bristol New Fire Station #3 : Bristol Fire Station #3 CO 12 New F2 Fixture

Job Number: 8212221

Bid Summary: Default

Extension By Phase

Item #	Description	Quantity	Price	U	Ext Price	Labor Hr	U	Ext Lab Hr	Lab F
	--- 04 Light Fixtures & Lamps ---								
F2	L.E.D. Recessed 2x2 Fixture	1	QUOTE	1	0.00	0.00	E	0.00	
	--- 04 Light Fixtures & Lamps Total ---				0.00			0.00	
	Job Total				0.00			0.00	

* Trade Price, Labor column 3

Change Order - Quotation

TO:
EWCT HANNA ELECTRIC, INC
Attn:Larry Hanna*New
PO BOX 588
DENNIS PORT, MA 02639-0588

Project: Bristol Firehouse #3 - Bristol, CT. LI-093024
Date: 09/30/25
PO #: BRISTOL FIREHOUSE #3
Change #: 2
Freight in Exempt : Yes

Material Change: **942.50**

Change Type	Quantity	Description	Unit or Lot#	Unit Price	Ext Price	Change Amt
Quote valid for 30 days. Tax not included in this quote.						
PLUS FREIGHT						
✓ F1-2'	2	PRFL-24-DI-FL-FL-40-SO-2-WM-W-DIM1	DAYOLITE	942.500	942.50	942.50

0

Prev Qty	Change Qty	New Qty
0	2	2

** New Item **

Total	942.50

From:
ELECTRICAL WHOLESALERS-HSS
MAIN OFFICE 860-522-3232
701 MIDDLE STREET
PO BOX 2786
MIDDLETOWN, CT 06457-2786
Printed By: TONY MCKAY

Authorizing Name: TONY MCKAY

File Number: 430868

ADDING TYPE F1-2'

These items are not ordered! To complete this order, sign below and provide a PO # for the order.

Signature:_____

9/30/2025 11:01:21 AM

W. J. MOUNTFORD CO.
GENERAL CONTRACTOR • CONSTRUCTION MANAGER
170 Commerce Way, South Windsor, CT 06074, (860) 291-9448, Fax (860) 289-6382
License #00900574 • www.wjmountford.com

Bristol Firehouse #3
163 Church Ave
Bristol, CT

Date: 10-13-25

PCO 034 - Add roof support steel for VRF-1 + KEF-1
- Add Brick support angle at entry canopy per RFI 051
- Add 24" x 24" louver for IT Closet Door #107
- Delete Perimeter Plywood in attic 190' x 2'-8" = 507 sf.

ITEM	QTY	UNIT	RATE	MATERIAL	RATE	LABOR
Subcontractors	-	-	-	-	-	-
Steeltech (See Attached)	1	lot	1,212.75	1,213		
Steeltech (See Attached)	1	lot	3,300.00	3,300		
Total Subcontractor Work				4,513		
W.J. Mountford Work	-	-	-	-	-	-
- Labor	-	-	-	-	-	-
Delete install of 5/8" plywood	(507)	sf	-		1.75	(887.25)
- Materials/Equipment	-	-	-	-	-	-
Door Louver (See Attached)	1	ea.	285.00	285	-	-
Delete 5/8" plywood	(507)	sf	1.05	(532)	-	-
Total WJM Work				(247)		(887)

Total Subcontractors	$	4,513
WJM 10% O+P on Subcontractors	$	451
Total W. J. Mountford Work	$	(1,135)
15% Mark-up on Our Work	$	-
Additional Bond Costs	$	57
Total Change Order Request	**$**	**3,887**

This Change Order Adds $3,887.00 to our contract amount and 1 days to the date of substantial completion.

Very Truly Yours,
W. J. MOUNTFORD, CO.

Leo Desautels
Vice President

CHANGE ORDER PROPOSAL

steeltech Building Products, Inc.
636 Nutmeg Rd. North • South Windsor,CT 06074
Phone- (860) 290-8930 • Fax- (860) 290-8940

JOB NAME:	Bristol Fire	**C.O. #**	3
CUSTOMER:	WJ Mountford	**DATE:**	9/17/2025
REF:	Customer Request	**JOB #:**	10-24-1589

DESCRIPTION: Additional labor to install added deck opening frames as requested.

Quantity	Unit	Material Costs	Unit Cost	Total
0	Lbs	WF Material	$ 1.20	$ -
0	Lbs	HSS Tube, Channel & Pipe	$ 1.60	$ -
0	Lbs	Plate & Angle	$ 1.25	$ -
0	Lbs	Bent Plate	$ 1.45	$ -
0	Lbs	Galvanizing	$ 0.56	$ -
0	Hrs	Fabrication	$ 85.00	$ -
0	Hrs	Trucking (With Driver)	$ 150.00	$ -
0	Hrs	Detailing	$ 90.00	$ -
0	Hrs	Engineering	$ 185.00	$ -
0	Hrs	Field Measuring	$ 88.00	$ -
		Material Subtotal		$ -
		Tax	0.00%	$ -
Line 1		Material Total		$ -

Quantity	Unit	Erection & Equipment Costs	Unit Cost	Total
24	Hrs	Ironworker	$ 125.00	$ 3,000.00
				$ -
				$ -
		Erection Subtotal		$ 3,000.00
		Tax	0.00%	$ -
Line 2		Erection Total		$ 3,000.00

Contractor Overhead and Profit	Allow %	Amount	Total
Net Value of Material (Amount = Line 1)	10%	$ -	$ -
Net Value of Erection/Installation (Amount=Line 2)	10%	$ 3,000.00	$ 300.00
Line 3	Contractor Overhead and Profit Total		$ 300.00

Line 4	Total Proposed Change Order Amount (Lines 1+2+3)	$ 3,300.00

THIS CHANGE REQUIRES AN ADDITIONAL 0 DAYS TO THE CONTRACT SCHEDULE.

By signing this change order the customer agrees that this work constitues an addition to the scope of Steeltech's contract and agrees to pay the total amount shown in Line 4.

Authorized By: _____ Company: _____

Print Name

Signed: _____ Date: _____

CHANGE ORDER PROPOSAL

steeltech Building Products, Inc.
636 Nutmeg Rd. North • South Windsor,CT 06074
Phone- (860) 290-8930 • Fax- (860) 290-8940

JOB NAME:	Bristol Fire	**C.O. #**	4
CUSTOMER:	WJ Mountford	**DATE:**	9/17/2025
REF:	Customer Request	**JOB #:**	10-24-1589

DESCRIPTION: Additional labor to install added angle at entryway per response to RFI 051.

Quantity	Unit	Material Costs	Unit Cost	Total
0	Lbs	WF Material	$ 1.20	$ -
0	Lbs	HSS Tube, Channel & Pipe	$ 1.60	$ -
82	Lbs	Plate & Angle	$ 1.25	$ 102.50
0	Lbs	Bent Plate	$ 1.45	$ -
0	Lbs	Galvanizing	$ 0.56	$ -
0	Hrs	Fabrication	$ 85.00	$ -
0	Hrs	Trucking (With Driver)	$ 150.00	$ -
0	Hrs	Detailing	$ 90.00	$ -
0	Hrs	Engineering	$ 185.00	$ -
0	Hrs	Field Measuring	$ 88.00	$ -
		Material Subtotal		$ 102.50
		Tax	0.00%	$ -
Line 1		Material Total		$ 102.50

Quantity	Unit	Erection & Equipment Costs	Unit Cost	Total
8	Hrs	Ironworker	$ 125.00	$ 1,000.00
				$ -
				$ -
		Erection Subtotal		$ 1,000.00
		Tax	0.00%	$ -
Line 2		Erection Total		$ 1,000.00

Contractor Overhead and Profit	Allow %	Amount	Total
Net Value of Material (Amount = Line 1)	10%	$ 102.50	$ 10.25
Net Value of Erection/Installation (Amount=Line 2)	10%	$ 1,000.00	$ 100.00
Line 3	Contractor Overhead and Profit Total		$ 110.25

Line 4	Total Proposed Change Order Amount (Lines 1+2+3)	$ 1,212.75

THIS CHANGE REQUIRES AN ADDITIONAL 0 DAYS TO THE CONTRACT SCHEDULE.

By signing this change order the customer agrees that this work constitues an addition to the scope of Steeltech's contract and agrees to pay the total amount shown in Line 4.

Authorized By: _____ Company: _____

Print Name

Signed: _____ Date: _____

TULL BROTHERS, INC.
66 New Britain Ave.
P.O. Box 189
Rocky Hill, CT. 06067
Phone 860-563-9328
Fax 860-563-1509

CHANGE ORDER

Date: 9/24/2025

Page:1

TO: WJ Mountford **ATTENTION: Leo D.**	**JOB: Bristol Fire House** **JOB #302109** **CHANGE ORDER # 1**

We hereby agree to make the change(s) specified below.

ADD LOUVER AT DOOR 107

NON-RATED LOUVER 24" X 24"	**$250.00**
CUT OUT LOUVER	**$35.00**

Note: This Change Order becomes part of and conformance with existing contract.

Date:9/24/2025 Authorized Signature (Contractor)

ACCEPTED- The above prices and specifications of this Change Order are satisfactory and are hereby accepted. All work to be performed under same terms and conditions as specified in original contract unless otherwise stipulated.

Date of acceptance_____

Signature_____

YOUNG DEVELOPERS LLC
ROOFING SERVICES
HAMDEN, CT

7341
Change Order Proposal Workbook

Attached to and made part of **Change Order Proposal Number:** 1

To: Project Manager — LEO DESAULTIS — **Date:** 10/10/25

From: GC/CMR — W.J. MOUNTFORD — **Project Number:**

Proposed Change: CANOPY - ADDED INSULATION AND REVISED DETAIL FOR SCUPPER AND CRICKET

Project Name: BRISTOL FIREHOUSE #3

Project Location: 163 CHURCH AVE BRISTOL CT

Quantity	Unit	Proposed Material(s) and/or Equipment	Unit Cost	Item Cost
1.00	BDL	2" POLYISO FLAT STOCK	$ 858.00	$ 858.00
~~2.00~~	~~BDL~~	~~TAPERED INSULATION~~	~~$ 858.00~~	~~$ 1,716.00~~
1.00	BOX	FASTENERS - VARYING LENGTHS AS REQUIRED	$ 500.00	$ 500.00
~~1.00~~	~~SET~~	~~2 PART UIA ADHESIVE~~	~~$ 665.00~~	~~$ 665.00~~
				$ -
				$ -
				$ -
				$ -
Use Continuation Worksheet M-E for Additional Material(s) and/or Equipment				$ -

OWN TAPERED AND CROSS SLOPE TO SCUPPER PER CONTRACT DRAWINGS

CLARIFY NEED FOR ADDED ADHESIVE AND FASTENERS.

1,358.00

Total Material(s) and/or Equipment Cost $ ~~3,739.00~~

97.35

Labor Classification	No. of Workers	Total Hours	Prevailing Labor Rate	Taxes on Labor	Worker's Compensation	Hourly Cash Benefits	Labor Cost
ROOFERS	2	~~16.00~~	$ 45.32	$ 6.70	$ 20.48	$ 24.85	$ ~~1,557.60~~
		5.5					$ 535.40
							$ -
							$ -
							$ -
Use Continuation Worksheet LC for Additional Labor Classifications							$ -

REDUCE ADDED LABOR PROPORTIONAL TO INSULATION REDUCTION ABOVE (66%)

535.40

Total Labor Cost $ ~~1,557.60~~

Total Material and Labor Cost **$** ~~**5,296.60**~~

1,893.40

General Contractor's or CMR's Overhead and Profit					
	To $5,000.00	20%		$15,001.00 to $25,000.00	15%
	$5,001.00 to $15,000.00	17%	$ 900.42	$25,000.00 and greater	12%

284.00

Total General Contractor's or CMR's Overhead and Profit $ ~~900.42~~

Total General Contractor's or CMR's Charge **$** ~~**6,197.02**~~

Additional Bond Premium Cost

$ 2,177.40

Subcontractor(s) -see attached worksheets	Trade	Cost
Use Continuation Worksheet AS for Additional Subcontractors		$ -

Total Subcontractor(s) Cost $ -

6% General Contractor's or CMR's Markup on Subcontractor Cost $ -

Total Subcontractor Charge $ -

$ 2,177.40

Total Proposed Change Order Charge $ ~~6,197.02~~

DAS Form 7341 (Rev. 06.03.2024)

W. J. MOUNTFORD CO.
GENERAL CONTRACTOR • CONSTRUCTION MANAGER
170 Commerce Way, South Windsor, CT 06074, (860) 291-9448, Fax (860) 289-6382
License #00900574 • www.wjmountford.com

Bristol Firehouse #3
163 Church Ave
Bristol, CT

Date: 10-13-25

PCO 036 - Credit to not install the owner furnished Gear Washer, Gear Dryer and SCBA Air Compressor.
- Note WJM will still install the existing the owner furnisehed existing Turn Out Gear Lockers.

ITEM	QTY	UNIT	RATE	MATERIAL	RATE	LABOR
Subcontractors	-	-	-	-	-	-
	-	lot	-	-	-	-
Total Subcontractor Work				-		-
W.J. Mountford Work	-	-	-	-	-	-
- Labor	-	-	-	-	-	-
Install Washer, Dryer + Compressor	(24)	hrs.	-	-	76.80	(1,843)
- Materials/Equipment	-	-	-	-	-	-
		ea.		-	-	-
Total WJM Work				-		(1,843)

Total Subcontractors	$	-
WJM 10% O+P on Subcontractors	$	-
Total W. J. Mountford Work	$	(1,843)
15% Mark-up on Our Work	$	-
Additional Bond Costs	$	(28)
Total Change Order Request	**$**	**(1,871)**

This Change Order Deducts $1,871.00 from our contract amount and 0 days to the date of substantial completion.

Very Truly Yours,
W. J. MOUNTFORD, CO.

Leo Desautels
Vice President

CITY OF BRISTOL

Bristol Firehouse #3 OPM

Monthly Report

October
2025

DOWNES CONSTRUCTION
200 Stanley Street
New Britain, CT
860.229.3755

DOWNES CONSTRUCTION

October 20, 2025

City of Bristol
Bristol Firehouse #3 OPM

Subject: Downes Construction Progress Report

I. Project Update

A. Schedule Overview

- **Installation of brick is substantially complete.**
- **Site contractor is completing rough grading at the back of the site moving towards the front.**
- **Site concrete is being planned for the week of 10/20.**
- **Priming / painting walls is currently in progress.**
- **Ceiling grid installation including ceiling tile cuts is substantially complete.**
- **Balance of window installation is in progress. Majority of windows and storefront is installed**
- **Light fixtures / sprinkler heads are getting installed in preparation for above ceiling inspection.**
- **Current schedule shows a total of 15 months with closeout (Current master schedule is attached). The turnover date remains unchanged from the original baseline schedule. Downes continues to monitor milestone activities closely since the current schedule leaves little float or slippage at this point. WJ Mountford maintains that original turnover can still be achieved. Given the current progress of grading the site, Mountford may have to re-evaluate landscaping at this point. Balance of site work is still being pushed to wrap up over the next couple months.**

B. Procurement (Re-cap of long lead items)

- **Switchgear -now on site and getting installed.**
- **Mechanical Equipment, dedicated outdoor air units, mechanical equipment installed.**
- **Emergency generator, on standby for delivery**
- **Contract Change Management (See Change Management Log Attached)**
- **Total Approved – ($66,745.00), net savings for the project so far**
- **Total Pending - $12,901.55**

C. QA/QC

- **WJM to sweep Church Ave as needed and prevent any sediment from spilling outside of limits of construction. WJM to monitor and perform cleanup as needed.**
- **Ensure site is secured at all times**
- **IMTL reports associated with concrete, rebar, winter weather procedure, structural steel and soil testing have been received and so far and no issues have been reported.**
- **Wall mockup construction, no exceptions taken.**

Attachments:

- **CPM Schedule**
- **Change Management Log**
- **Commissioning Agent (Van Zelm) latest report**
- **Latest field observation reports w/Progress Photos**

Bristol Firehouse #3
Schedule Update 08-27-25

ID	Task Name	Duration	Start	Finish	Predecessors
1					
2	**Lines 5-9 + Bunks / Lockers/ Day Rm / Kitchen**	**121 days**	**Mon 7/7/25**	**Mon 12/22/25**	
3	Shingle Roofing	5 days	Mon 9/15/25	Fri 9/19/25	
4	Rough MEP 5-6 Line	60 days	Mon 7/7/25	Fri 9/26/25	
5	Sheetrock + Tape	45 days	Mon 7/28/25	Fri 9/26/25	
6	Prime + 1st Coat	5 days	Mon 9/29/25	Fri 10/3/25	5
7	Acoustical Grid	8 days	Mon 10/6/25	Wed 10/15/25	6
8	Lights , RGDs Sprinkler Heads	8 days	Thu 10/16/25	Mon 10/27/25	7
9	Above Ceiling Inspections	1 day	Tue 10/28/25	Tue 10/28/25	8
10	Ceiling Pads	3 days	Wed 10/29/25	Fri 10/31/25	9
11	Tile / FRP Panels	8 days	Mon 11/3/25	Wed 11/12/25	10
12	Flooring	8 days	Thu 11/13/25	Mon 11/24/25	11
13	Plumbing Fixtures	5 days	Tue 11/18/25	Mon 11/24/25	12FS-5 days
14	Kitchen Equipment	20 days	Mon 10/27/25	Fri 11/21/25	
15	Doors / Millwork / Toilet Accessories	9 days	Thu 11/13/25	Tue 11/25/25	11
16	Final Painting	10 days	Wed 11/26/25	Tue 12/9/25	15
17	Electrical Plate and Switch	8 days	Wed 12/3/25	Fri 12/12/25	16FS-5 days
18	Misc Finishes / Murals	5 days	Wed 12/10/25	Tue 12/16/25	16
19					
20	**Lines 1- 5 = Apparatus Bay / Mech. / Sprinkler / Elec.**	**89 days**	**Wed 8/20/25**	**Mon 12/22/25**	
21	Under Ground Plbg + Electrical	9 days	Wed 8/20/25	Mon 9/1/25	
22	Prep + Pour Slabs	6 days	Tue 9/2/25	Tue 9/9/25	21
23	Apparatus Bay Low Roof 1-2 Lines	2 days	Wed 9/10/25	Thu 9/11/25	22
24	Rough MEP 1-5 Line	40 days	Wed 9/10/25	Tue 11/4/25	22
25	Sheetrock + Tape	15 days	Wed 10/1/25	Tue 10/21/25	24FS-25 days
26	Prime + 1st Coat	6 days	Wed 11/5/25	Wed 11/12/25	24
27	Lights , RGDs Sprinkler Heads	12 days	Thu 11/13/25	Fri 11/28/25	26
28	Doors / Equipment / Shelving	10 days	Thu 11/13/25	Wed 11/26/25	26
29	Final Painting Seal Floors	15 days	Thu 11/27/25	Wed 12/17/25	28
30	Wall Base	3 days	Thu 12/18/25	Mon 12/22/25	29
31					
32					
33	**Exterior Enclosure**	**63 days**	**Wed 8/27/25**	**Fri 11/21/25**	
34	AVB	3 days	Wed 8/27/25	Fri 8/29/25	
35	Brick Veneer	40 days	Mon 9/1/25	Fri 10/24/25	34
36	Cast Stone	7 days	Wed 10/15/25	Thu 10/23/25	
37	PVC Panels Walls and Soffits	25 days	Wed 9/17/25	Tue 10/21/25	34SS+15 day
38	Windows	40 days	Mon 9/8/25	Fri 10/31/25	
39	Storefronts	10 days	Mon 11/10/25	Fri 11/21/25	
40	OH Doors at Apparatus Bays	10 days	Mon 10/13/25	Fri 10/24/25	35FS-10 days
41	Roofing Flashing and Trim	15 days	Fri 10/24/25	Thu 11/13/25	36
42					
43	**Sitework**	**50 days**	**Mon 9/15/25**	**Fri 11/21/25**	
44	Storm Drainage Set Tops	5 days	Mon 9/15/25	Fri 9/19/25	
45	Sanitary Structures Set Tops	2 days	Mon 9/22/25	Tue 9/23/25	44
46	Water Lines	1 day	Wed 9/24/25	Wed 9/24/25	45
47	Gas Service to Building + Generator	5 days	Mon 10/6/25	Fri 10/10/25	35FS-15 days
48	Generator	10 days	Mon 10/13/25	Fri 10/24/25	47
49	Electric Vehicle Service	3 days	Wed 9/24/25	Fri 9/26/25	45
50	Light Pole Base and Conduits	7 days	Mon 9/29/25	Tue 10/7/25	49
51	Rough Grade Place Sub Base	3 days	Wed 10/8/25	Fri 10/10/25	50
52	Concrete Walks / Curbs / Bollards	15 days	Mon 10/13/25	Fri 10/31/25	51
53	Paving	10 days	Mon 11/3/25	Fri 11/14/25	52
54	Curb Stops, Fence + Signage	5 days	Mon 11/17/25	Fri 11/21/25	53
55	Landscaping	5 days	Wed 10/22/25	Tue 10/28/25	52FS-8 days
56					
57					
58	**Electrical Service**	**80 days**	**Mon 8/4/25**	**Fri 11/21/25**	
59	Form + Pour Equipment Pads	2 days	Mon 9/8/25	Tue 9/9/25	
60	Install Branch Panels PP1-4	20 days	Mon 8/4/25	Fri 8/29/25	
61	Install Automatic Transfer Switch "ATS"	5 days	Fri 9/12/25	Thu 9/18/25	59FS+2 days
62	Install conduits from Main Panel to Branch Panels	5 days	Wed 9/10/25	Tue 9/16/25	59
63	Install Main Switch Gear , Meter/ Socket	8 days	Mon 10/6/25	Wed 10/15/25	35FS-15 days
64	Pull Conductors From Main Panel to Branch Panels	5 days	Thu 10/16/25	Wed 10/22/25	63
65	Inspections on Electrical Service	2 days	Thu 10/23/25	Fri 10/24/25	64
66	Eversource Install Primaries and Transformer	15 days	Mon 10/27/25	Fri 11/14/25	65
67	Energize Service and Secondary Circuits	5 days	Mon 11/17/25	Fri 11/21/25	66
68					
69	**MEP Startup + Commission**	**25 days**	**Mon 11/24/25**	**Fri 12/26/25**	
70	HVAC Startup & Prejunctional Checks	4 days	Mon 11/24/25	Thu 11/27/25	67
71	Testing + Balancing HVAC System	6 days	Fri 11/28/25	Fri 12/5/25	70
72	Functional Testing HVAC System	4 days	Mon 12/8/25	Thu 12/11/25	71
73	Functional Testing Plumbing Systems	2 days	Mon 12/8/25	Tue 12/9/25	71
74	Functional Testing - Electrical Power Systems	3 days	Mon 12/15/25	Wed 12/17/25	17
75	Functional Testing - Faire Alarm & Fire Sprinkler Systems	3 days	Mon 12/15/25	Wed 12/17/25	17
76	Functional Testing Security + PA Systems	2 days	Mon 12/15/25	Tue 12/16/25	17
77	Functional Testing Data / IT Systems	4 days	Mon 12/15/25	Thu 12/18/25	17
78	Functional Testing Kitchen Equipment	2 days	Mon 12/8/25	Tue 12/9/25	71
79					
80					
81	**Construction Closeout & Final Inspections**	**8 days**	**Wed 12/17/25**	**Fri 12/26/25**	
82	Owner / A&E Inspection & Punchlist	2 days	Wed 12/17/25	Thu 12/18/25	18
83	Punchlist Period & Final Cleaning	5 days	Fri 12/19/25	Thu 12/25/25	82
84	Contract Closeout Submittals	5 days	Fri 12/19/25	Thu 12/25/25	82
85	Final Inspections	1 day	Fri 12/26/25	Fri 12/26/25	83

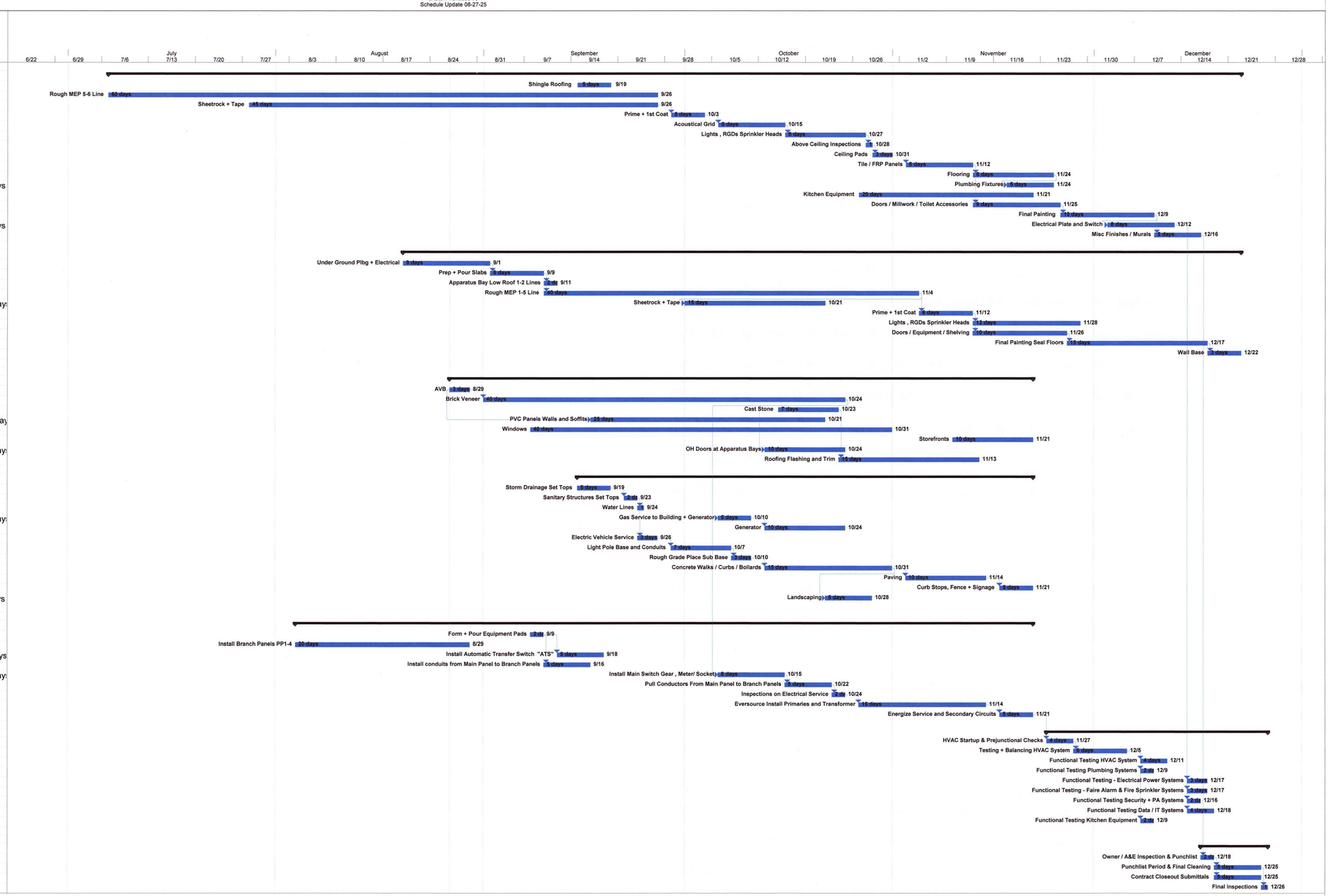

Project: MSProj11
Date: Wed 8/27/25

Task | Summary | Rolled Up Milestone | Split | Project Summary | Inactive Milestone | Manual Task | Manual Summary Rollup | Start-only | External Tasks | Progress
Milestone | Rolled Up Task | Rolled Up Progress | External Tasks | Group By Summary | Inactive Summary | Duration-only | Manual Summary | Finish-only | External Milestone | Deadline

DOWNES CONSTRUCTION

Last Updated : 10/20/2025

Bristol Firehouse #3 OPM

Potential Change Order (PCO) Log-In-Sheet

PCO Sent to Owner	B - Budget		
On Hold	Q - Quote from Contractor		
In Review w/SPA	R - Review		
CO Issued	A - Approved		
Closed / No cost	O - Other	V - Void	

			Out-of-scope	Out-of-scope Total		
COP	Contractor	Description	COP Amount		Cost Status	Reference/Comments
1	WJ Mountford	Damproofing Credit	$ (4,207)		A	
1	FEE	10.000%	$ -		A	
1	BOND	1.50%	$ (63)		A	
1			**$ (4,270)**	**$ (4,270)**	A	
2	WJ Mountford	Asphalt Removal	$ 4,000.00		A	
2	FEE	10.000%	$ 400.00		A	
2	BOND	1.50%	$ 66.00		A	
2			**$ 4,466**	**$ 4,466**	A	
3	WJ Mountford	Additional Concrete At Aprons	$ -		V	Not moving forward
3	FEE	10.000%	$ -		V	
3	BOND	1.50%	$ -		V	
3			**$ -**	**$ -**	V	
4	WJ Mountford	Overhead Door Credit	$ (101,000.00)		A	
4	FEE	10.000%	$ -		A	
4	BOND	1.50%			A	
4			**$ (101,000)**	**$ (101,000)**	A	
5	WJ Mountford	Install Stone At Dry Well	$ 1,895		A	
5	FEE	10.000%	$ 190		A	
5	BOND	1.50%	$ 31		A	
5			**$ 2,116**	**$ 2,116**	A	
6	WJ Mountford	Additioanl Rigid Insulation	$ 4,303.39		A	
6	FEE	10.000%	$ 430		A	
6	BOND	1.50%	$ 71		A	
6			**$ 4,805**	**$ 4,805**	A	
7	WJ Mountford	Additioanl Structural Fill	$ 10,332.00		A	
7	FEE	10.000%	$ -		A	
7	BOND	1.50%	$ 155		A	
7			**$ 10,487**	**$ 10,487**	A	
8	WJ Mountford	Custom Color For Storefront	$ 21,275.00		V	
8	FEE	10.000%	$ 2,128		V	
8	BOND	1.50%	$ 351		V	
8			**$ 23,754**	**$ 23,754**	V	
9	WJ Mountford	Add 6 Inch Tee & Cap	$ 2,359.00		V	
9	FEE	10.000%	$ 236		V	

			Out-of-scope	Out-of-scope Total		
COP	Contractor	Description	COP Amount		Cost Status	Reference/Comments
9	BOND	1.50%	$ 39		V	
9			**$ 2,634**	**$ 2,634**	V	
10	WJ Mountford	Stock Wheel Guards In Lieu of Specified Custom Guards	$ (3,500.00)		A	
10	FEE	10.000%	$ -		A	
10	BOND	1.50%	$ (53)		A	
10			**$ (3,553)**	**$ (3,553)**	A	
11	WJ Mountford	Exercise Room Outlets	$ 3,098.00		A	
11	FEE	10.000%	$ 310		A	
11	BOND	1.50%	$ 51		A	
11			**$ 3,459**	**$ 3,459**	A	
12	WJ Mountford	Misc. Steel Detailing	$ 7,906.00		A	Part of CO#5
12	FEE	10.000%	$ 791		A	
12	BOND	1.50%	$ 130		A	
12			**$ 8,827**	**$ 8,827**	A	
13	WJ Mountford	Storefront Changes To 8" System	$ 8,242.00		A	
13	FEE	10.000%	$ 824		A	
13	BOND	1.50%	$ 136		A	
13			**$ 9,202**	**$ 9,202**	A	
14	WJ Mountford	Post Paint Break Metal	$ 4,013		A	
14	FEE	10.000%	$ 401		A	
14	BOND	1.50%	$ 66		A	
14			**$ 4,480**	**$ 4,480**	A	
15	WJ Mountford	Credit Two Wheel Guards	$ (1,100)		A	
15	FEE	10.000%	$ -		A	
15	BOND	1.50%	$ (17)		A	
15			**$ (1,117)**	**$ (1,117)**	A	
16	WJ Mountford	Exterior Sign Revisions	$ 2,108		A	
16	FEE	10.000%	$ 211		A	
16	BOND	1.50%	$ 35		A	
16			**$ 2,354**	**$ 2,354**	A	
17	WJ Mountford	Flowable Fill For Well Near CB1-6	$ 3,393		A	
17	FEE	10.000%	$ 339		A	
17	BOND	1.50%	$ 56		A	
17			**$ 3,788**	**$ 3,788**	A	
18	WJ Mountford	Add Bacnet Controls For Kitchen Hood	$ 3,300		A	
18	FEE	10.000%	$ 330		A	
18	BOND	1.50%	$ 54		A	
18			**$ 3,684**	**$ 3,684**	A	
19	WJ Mountford	Chnge Breaker For VRF-5	$ 782		A	
19	FEE	10.000%	$ 78		A	
19	BOND	1.50%	$ 13		A	

			Out-of-scope	Out-of-scope Total		
COP	Contractor	Description	COP Amount		Cost Status	Reference/Comments
19			**$ 873**	**$ 873**	A	
NA	WJ Mountford	Credit Back Axe Allowance (Part of Orig Base Bid)	$ (5,000)		A	
NA	FEE	10.000%	$ -		A	
NA	BOND	1.50%	$ -		A	
NA			**$ (5,000)**	**$ (5,000)**	A	
20	WJ Mountford	Option 1 - EV Charging Revisions	$ (5,042)		V	
20	FEE	10.000%	$ -		V	
20	BOND	1.50%	$ (76)		V	
20			**$ (5,118)**	**$ (5,118)**	V	
21	WJ Mountford	Option 2 - EV Charging Revisions	$ (3,576)		A	
21	FEE	10.000%	$ -		A	
21	BOND	1.50%	$ (54)		A	
21			**$ (3,630)**	**$ (3,630)**	A	
22	WJ Mountford	Sanitary Sewer Main Revisions	$ (7,298)		A	Part of CO#5
22	FEE	10.000%	$ -		A	
22	BOND	1.50%	$ -		A	
22			**$ (7,298)**	**$ (7,298)**	A	
23	WJ Mountford	Add Step Up Transformer For Owner Furnish Gear Dryer	$ 5,181		A	Part of CO#5
23	FEE	10.000%	$ 518		A	
23	BOND	1.50%	$ 85		A	
23			**$ 5,785**	**$ 5,785**	A	
24	WJ Mountford	2 Rows of Glass For (6) Overhead Doors & Tint Glass At Front Only	$ (17,400)		A	Part of CO#5
24	FEE	10.000%	$ -		A	
24	BOND	1.50%	$ (261)		A	
24			**$ (17,661)**	**$ (17,661)**	A	
25	WJ Mountford	Delete Remaining Wheelguards	$ (9,900)		A	Part of CO#5
25	FEE	10.000%	$ -		A	
25	BOND	1.50%	$ (149)		A	
25			**$ (10,049)**	**$ (10,049)**	A	
26	WJ Mountford	Rock Removal Underneath CB1-2 & Boulders In Excess of 1 CY	$ 2,500		A	Part of CO#5
26	FEE	10.000%	$ 250		A	
26	BOND	1.50%	$ 41		A	
26			**$ 2,791**	**$ 2,791**	A	
27	WJ Mountford	Drainage Piping For (6) Downspout Locations	$ 12,051		A	Part of CO#5
27	FEE	10.000%	$ 1,205		A	
27	BOND	1.50%	$ 199		A	
27			**$ 13,455**	**$ 13,455**	A	
28	WJ Mountford	Provide wall surrounds for showers and rev size of shower bases rms 109/111	$ 7,268		A	Part of CO#5

COP	Contractor	Description		Out-of-scope COP Amount		Out-of-scope Total		Cost Status	Reference/Comments
28	FEE		10.000%	$	727			A	
28	BOND		1.50%	$	120			A	
28				**$**	**8,115**	**$**	**8,115**	A	
29	WJ Mountford	Add 2 PA Speakers		$	2,588			A	Part of CO#5
29	FEE		10.000%	$	259			A	
29	BOND		1.50%	$	43			A	
29				**$**	**2,890**	**$**	**2,890**	A	
30	WJ Mountford	AV System Revisions		$	(8,660)			A	Part of CO#5
30	FEE		10.000%	$	-			A	
30	BOND		1.50%	$	(130)			A	
30				**$**	**(8,790)**	**$**	**(8,790)**	A	
31	WJ Mountford	Aluminum Hardware Revisions		$	3,623			A	
31	FEE		10.000%	$	362			A	
31	BOND		1.50%	$	60			A	
31				**$**	**4,045**	**$**	**4,045**	A	
32	WJ Mountford	Access Control AV & Solar Credit		$	3,623			A	
32	FEE		10.000%	$	362			A	
32	BOND		1.50%	$	60			A	
32				**$**	**4,045**	**$**	**4,045**	A	
33	WJ Mountford	Exterior Speakers & F2 Type Light For Janitor's Closet		$	2,301			A	
33	FEE		10.000%	$	230			A	
33	BOND		1.50%	$	38			A	
33				**$**	**2,569**	**$**	**2,569**	A	
34	WJ Mountford	VRF1 & KEF1 Support With Door Louver & Plywood Credit		$	3,378			A	
34	FEE		10.000%	$	451			A	
34	BOND		1.50%	$	57			A	
34				**$**	**3,886**	**$**	**3,886**	A	
35	WJ Mountford	Canopy Roof Revisions		$	1,893			A	
35	FEE		10.000%	$	451			A	
35	BOND		1.50%	$	57			A	
35				**$**	**2,401**	**$**	**2,401**	A	

Total Void or Rejected	**$**	**21,269.73**
Total Pending (Budgeted, Have Quote, or In Review)	**$**	**12,901.55**
Total Approved	**$**	**(66,745)**

FIELD REPORT #3

Issue Date: September 24, 2025

Project Name: Bristol Fire House 3

van Zelm Project # 2023084.00

Date of site visits: September 22, 2025

Written by: Robert Ayer

DISTRIBUTION / ATTENDANCE:

Director of Public Works City of Bristol		**van Zelm Engineers**	
☐Raymond Rogozinski	raymondrogozinski@bristolct.gov	☐ Mike Marshall	mmarshall@vanzelm.com
SPA		☐ Brian Doty	bdoty@vanzelm.com
☐ Chris Nardi AIA	cnardi@silverpetrucelli.com	☑ Robert Ayer	rayer@vanzelm.com
		SNE Controls	
		☐ Ron Duplin	Ron.duplin@snebuildingsystems.com
General Contractor		**Hanna Electric**	
☐ Leo Desautels PM	ldesautels@wjmountford.com	☐ Larry Hanna	Larryhannaelectricnc.com
☑ Nick Nieseralla	nnieseralla@wjmountford.com		
MEP SPA		**R&R Mechanical**	
☐ Adee Gabriel	agabriel@silverpetrucelli.com	☐ Ed Roucco	rrmechservices@outlook.com
☐ Micheal Chambers	mchambers@silverpetrucelli.com		
☐ Jim Stenqvist	jstenqvist@silverpetrucelli.com		
Contraction Manager			
☐ Frank Tomcak	ftomcak@downesco.com		

☑ In *Attendance*

General:

The following is an overview of the items observed during site visits of the MEP Systems at Bristol Fire House 3

Item No	Observations and Determinations	Action Items
1	**Housekeeping:** The building and site were walked, and the areas are clean. The housekeeping was being performed as we went about these spaces. The exterior could use more additional attention as there are blocks and debris everywhere. Site work will correct this but tripping hazards are numerous.	FYI
2	**Envelope:** The exterior of the building is coming along. The brick exterior is really taking shape. The doors and windows will be installed soon as the perimeter will need to be tight prior to equipment start up. See the figure below. The garage slabs are now poured so the footing beneath is perfect and now the under slab is protected. The conduit runs overhead can be seen below, well supported and out of the way for all other equipment.	FYI

Exterior Housekeeping

Garage Slab

Back of House

Project Name: Bristol Fire House 3
Project Number 2023084.00

Electrical Room 130

Pad-Vault

3	**Electrical:** The figures above show the Electrical room with housekeeping slabs and buried conduit inside the building. The 300 KVA transformer vault and generator pads are being finalized with conduits running below grade. I assume prior to back fill concrete chipped away will be sealed prior to setting transformer to alleviate wash out.	FYI

4	**Seismic:** R&R Mechanical has reached out to Vibra-Conn who has reviewed the documents and states that the EOR has indicated that the Seismic Design Category is "A" buildings as indicated on S100 and therefore the MEP is excluded from seismic as per ASCE-7-16 requirement	FYI

R&R Mechanical Services
12 Stagecoach Circle
Milford, CT 06460

Attention: Edward Ruocco

Project Name: Bristol Fire Station – Seismic Requirements

Ed,

This letter is to clarify that seismic restraints would not be required for mechanical equipment and piping on this project in accordance with ASCE- 7-16 requirements. The Seismic Design category "A" indicated on the S100 drawing page would correlate to the exclusion of seismic requirements for the project. A Seismic Design Category "C" or "D", and a 1.5 importance factor are necessary for seismic restraints to be required, per code.

If you should have any questions or require additional information, please do not hesitate to contact us.

Very truly yours,

VIBRA-CONN LG LLC
Jonathan Lininger
Jonathan Lininger

Email: jonathan@vibra-conn.com

STATE OF CONNECTICUT
SEAN P. CUNNINGHAM
No. 18692
LICENSED
PROFESSIONAL ENGINEER

8/22/25

Seismic Compliance

5	**Insulation:** As the equipment is being installed, insulation is ongoing but the insulation saddles have not been installed and this leads to crushing the mineral rendering poor performance, please install saddles as required. Support and saddles should be applied to all piping, as stated before wire ties are not an acceptable support. Additionally, all raw ends are to be sealed.	FYI

Insulation Saddles

Project Name: Bristol Fire House 3
Project Number 2023084.00

6	**Equipment:** The rooftop equipment is ongoing but still work to be done, gas piping electrical and actual unit mounting plus the ductwork. We strongly recommend that the kitchen prefab ductwork be either covered or placed inside as the mineral wool between the inner and outer skin is not meant to get wet. The roof overall should be protected better. There is lots of construction stuff being stored, see photos below.	FYI

Roof Protection

7	**Attic:** It is also important that the refrigerant piping be supported with saddles at each connection point. We do not typically see wire ties as being the proper means and methods. EOR to comment here. We did wonder if there would be any lighting installed within the attic space. We understand that this is not supposed to be a storage area in the future, however interior lighting might be good idea but the drawings do not indicate lighting.	FYI

Attic

8	**Dryer Vent:** In the photos below, there appears to be an issue with the roof deck where it appears the dryer vent was thought to penetrate the roof when indeed it is supposed to be a sidewall vent. Plywood needs to be repaired, see photo below.	FYI

Dryer Vent

9	**Start-up:** As we get closer to starting equipment I ask for coordination with all trades so I can attend the factory startups as part of the pre-functional testing requirements.	FYI

10	**Controls:** As we get closer to starting equipment I ask for the controls contractor to reach out to me so we can coordinate our sequences and start times. W.J. Mountford please make sure this report gets sent to SNE as we need to start the communications now prior to testing.	FYI

11	**Access:** The roof access is not installed and there are some concerns about the roof membrane where the hatch is to be installed. EOR Architect should review.	FYI

12	**Schedule:** The next site visit will be scheduled with W.J. Mountford probably mid-October. In the meantime, should any question arise please reach out to me and keep me posted as we are getting closer to the completion date. As always if anyone has any questions or comments feel free to contact me.	FYI

End of Field Report #03

Robert Ayer
Senior Commissioning Consultant
10 Talcott Notch Road
Farmington Ct. 06032
(860) 424-7377
Respectfully submitted,

VAN ZELM HEYWOOD & SHADFORD, INC.

Project Name: Bristol Fire House 3
Project Number 2023084.00

DOWNES CONSTRUCTION

General Superintendent Field Report

PROJECT: Bristol FD		**DATE:** 9/25/25
Superintendent:		**Project Manager:**

Safety / Security Observation	B.I.C.
Several people with no hard hats	

Site Progress	B.I.C.
Brick continues which is hindering the site work development. Interior above ceiling continue at a good pace. Glazing is underway Door frames are being painted. HVAC 2 Mountford 2	

Schedule Impacts / Issues / TIA	B.I.C.

DOWNES CONSTRUCTION

Documentation: Daily reports / Scaffold / Fall protection / Interim Life Safety	B.I.C.
Up to date	

Quality Control	B.I.C.

Pre-Installation Meetings	B.I.C.

Distribution: Project Team	
Report Signature: Bob Sessions	

EASYFLEX

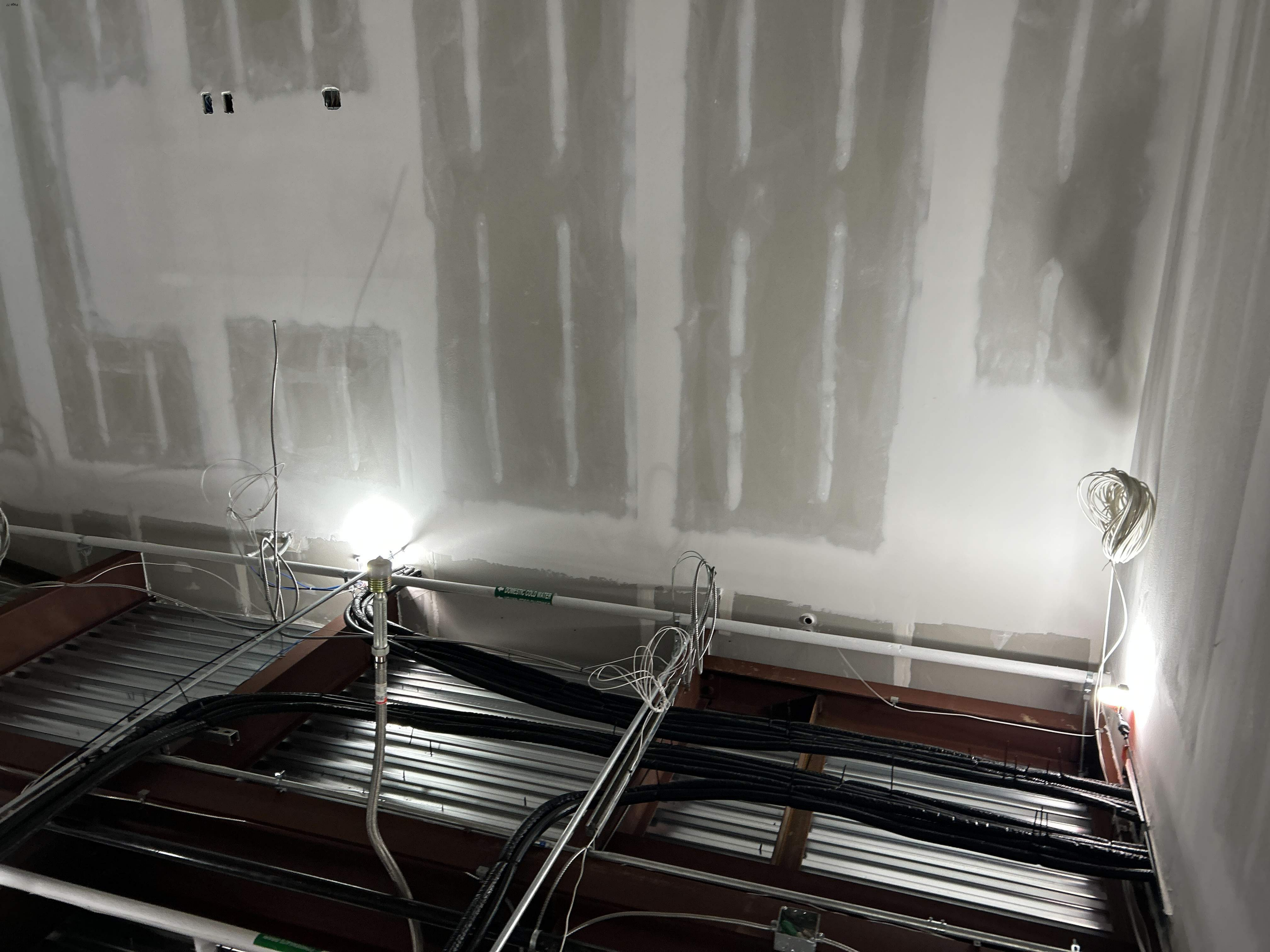
DOMESTIC COLD WATER

ProForm
10-90 30PCS

CommercialWrap
Tyvek
Styrofoam
Scoreboard Insulation

Micro-Lok HP

METALTECH
Cat 6 Plenum

SPK
EXIT

CommercialWrap.
CommercialWrap.
CommercialWrap.
CommercialWrap.
CommercialWrap.
CommercialWrap.

OF DRAIN

3" R:15.00
RSI:2.64
DUPONT

DOWNES CONSTRUCTION

General Superintendent Field Report

PROJECT: Bristol FD		**DATE:** 10/6/2025	
Superintendent:		**Project Manager:**	

Safety / Security Observation	B.I.C.
Lack of hard hats and eye protections	

Site Progress	B.I.C.
Site work not started due to brick still ongoing. Interior prime is happening Glazing continues Overhead roughs still ongoing.	

Schedule Impacts / Issues / TIA	B.I.C.

DOWNES CONSTRUCTION

Documentation: Daily reports / Scaffold / Fall protection / Interim Life Safety	B.I.C.
Up to date	

Quality Control	B.I.C.

Pre-Installation Meetings	B.I.C.

Distribution: Project Team	
Report Signature: Bob Sessions	

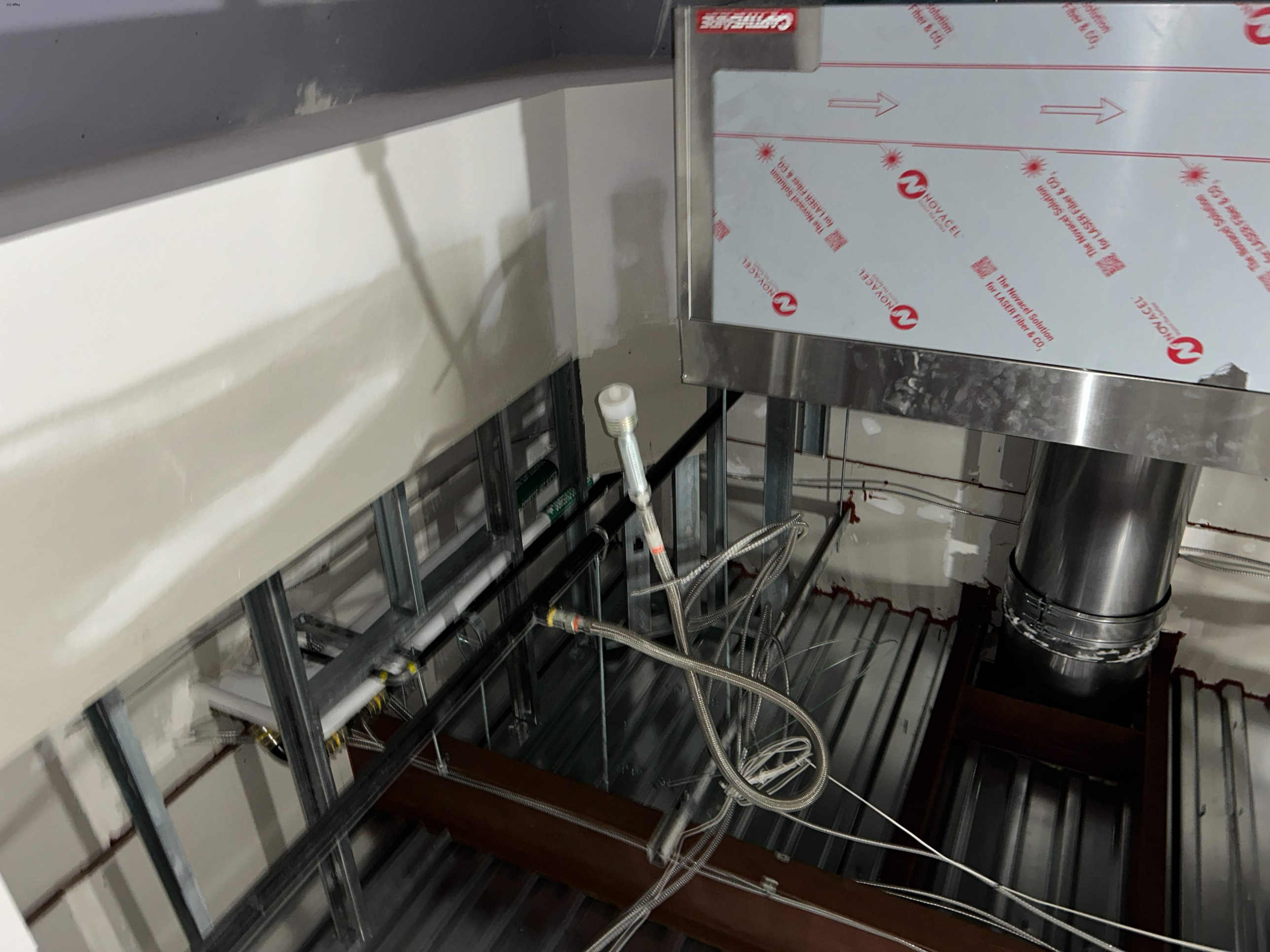
NOVACEL
The Novacel Solution
for LASER Fiber & CO2

ProForm
MULTI-USE
ProForm
MULTI-USE

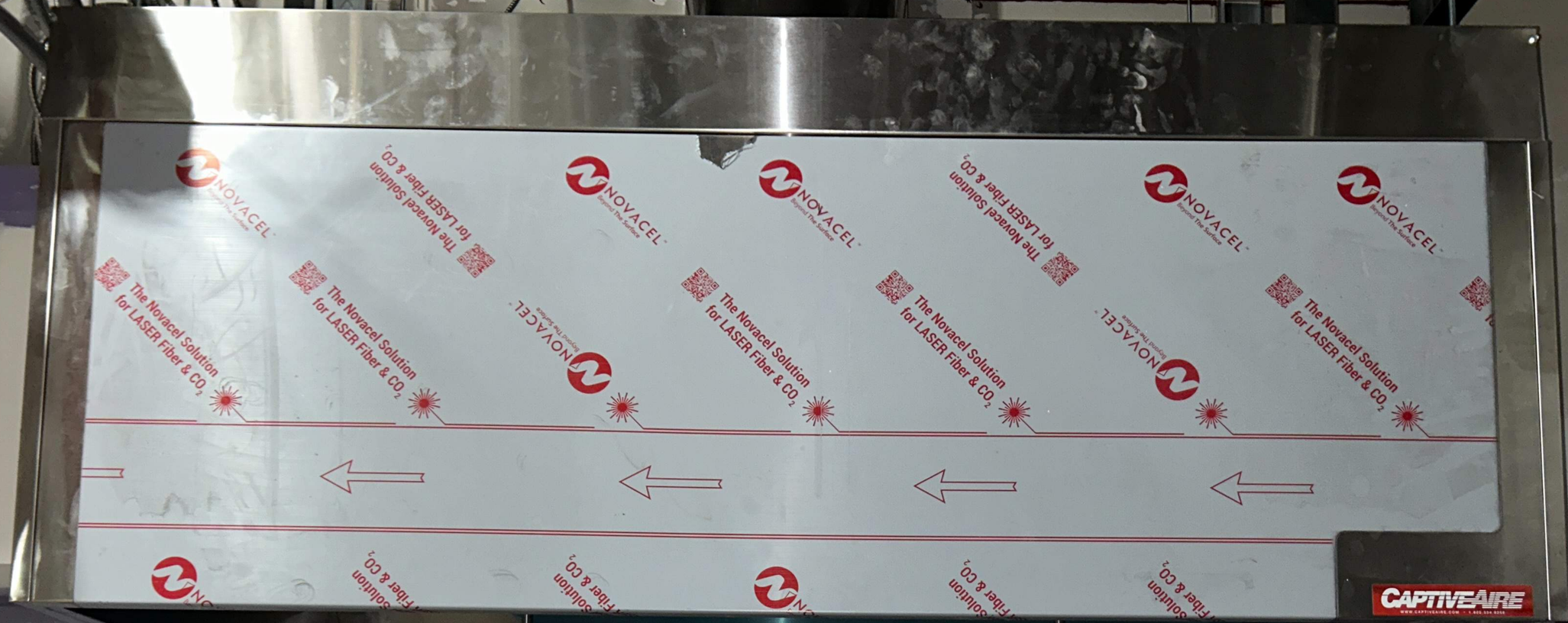
NOVACEL
Beyond The Surface
The Novacel Solution for LASER Fiber & CO2
CAPTIVEAIRE

Armstrong
GOWAKU

JLG LIFT

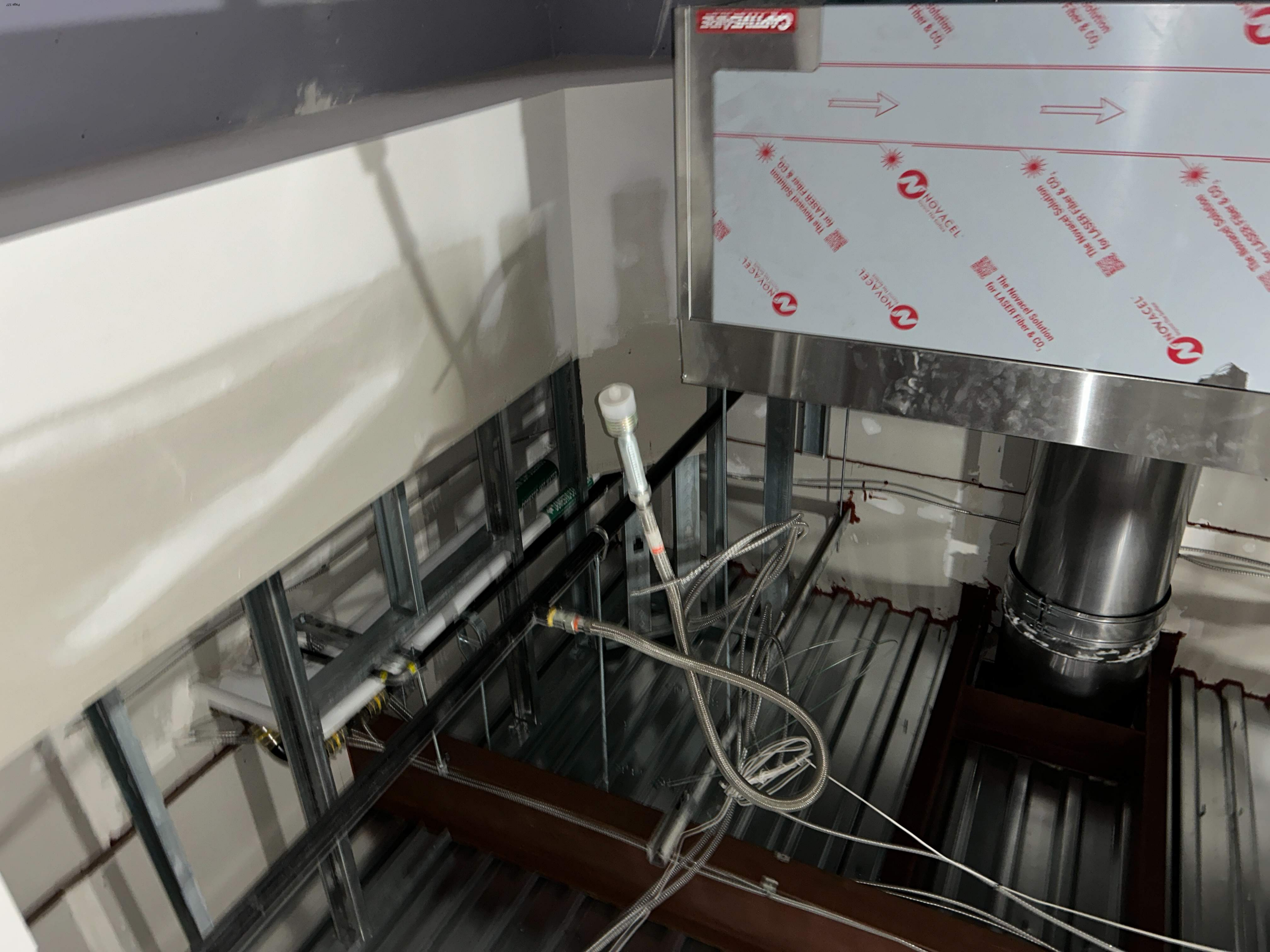
NOVACEL
The Novacel Solution for LASER Fiber & CO2

ProForm
MULTI-USE
ProForm
MULTI-USE

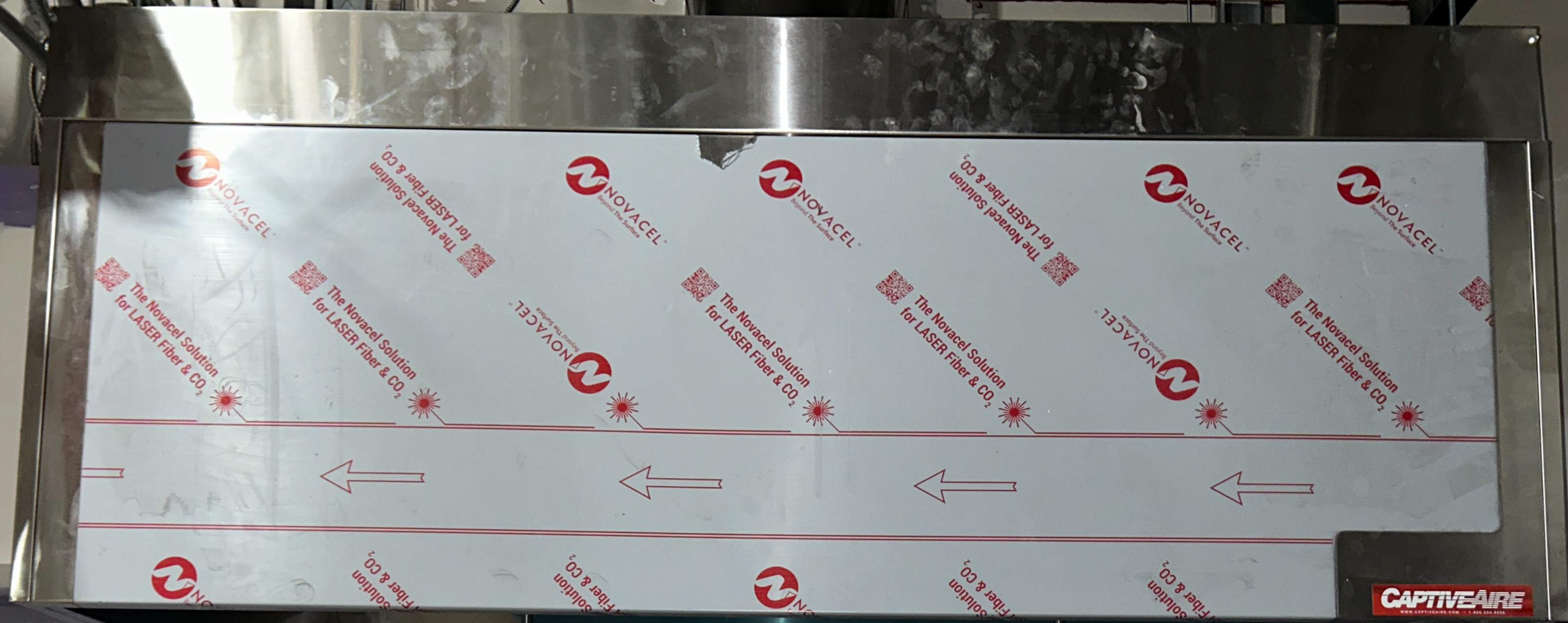
NOVACEL
Beyond The Surface
The Novacel Solution for LASER Fiber & CO2
CAPTIVEAIRE

Armstrong
DEWALT

JLG LIFT

DOWNES CONSTRUCTION

General Superintendent Field Report

PROJECT: Bristol FD		**DATE:** 10/8
Superintendent:		**Project Manager:**

Safety / Security Observation	B.I.C.
Dark in a lot of rooms. Told Nick he needs more light	

Site Progress	B.I.C.
MDPs are set. Transfer switch coming today	
Started blockfill in apparatus bay	
Mortar mix station removed site work to start	
Masons substantially complete	
Cooking hood and ansul system installed	
Walls primed and first coated	
Ceiling grid started	
Glazing continues with most frames in	
Light pole bases set wires pulled	

Schedule Impacts / Issues / TIA	B.I.C.

DOWNES CONSTRUCTION

Documentation: Daily reports / Scaffold / Fall protection / Interim Life Safety	B.I.C.
Up to date	

Quality Control	B.I.C.

Pre-Installation Meetings	B.I.C.

Distribution: Project Team	
Report Signature: Bob Sessions	

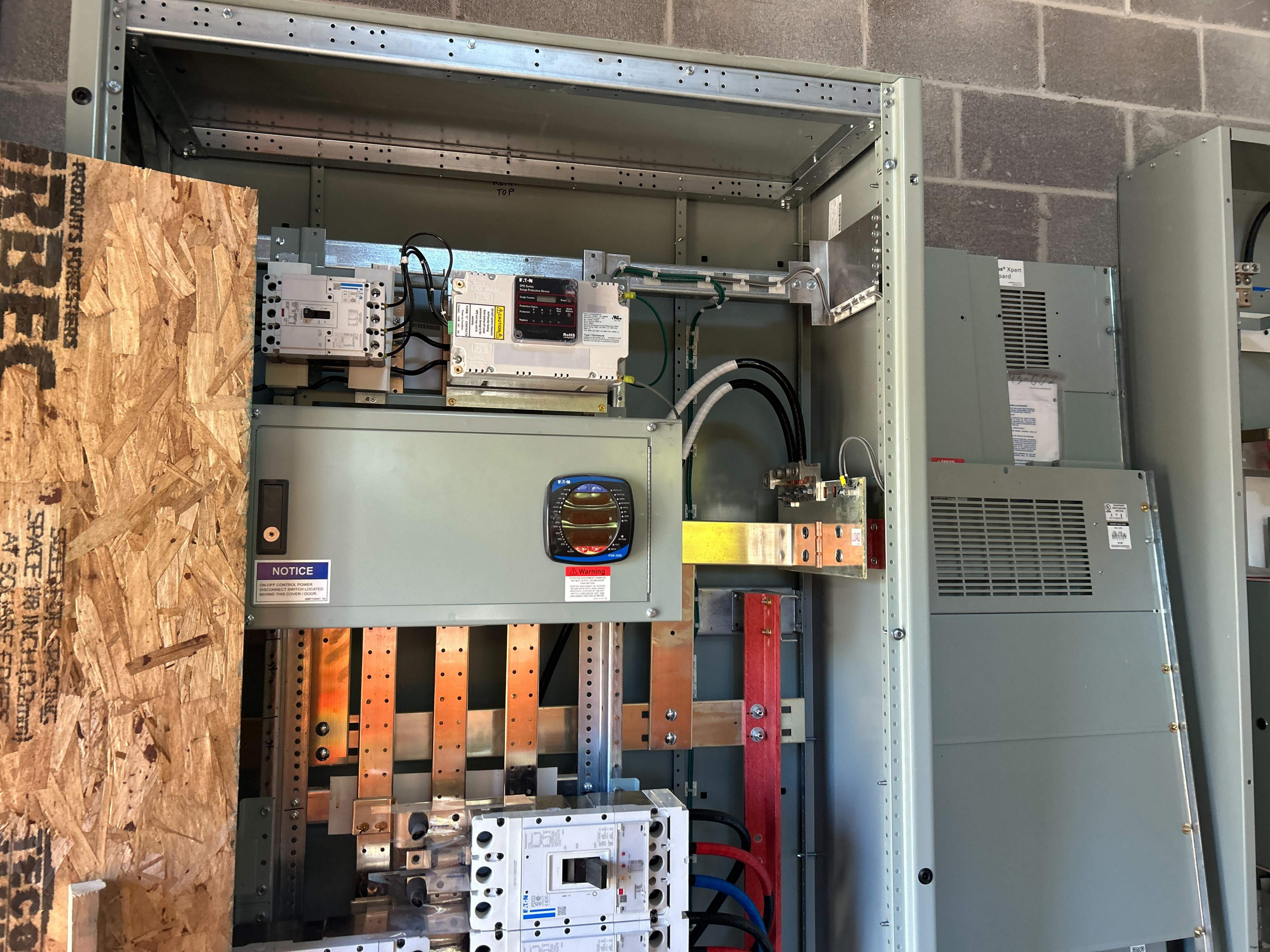
PRODUCTS FOR
SPACE
NOTICE
ON-OFF CONTROL POWER
DISCONNECT SWITCH LOCATED
BEHIND THIS COVER / DOOR.
Warning
E-T-N
SPD Series
Surge Protective Device
RoHS
PXM 3000
LOAD

30-2939

ROOF DR

EMERGENCY CIRCUITS

LVS®

WARNING

Please DO NOT energize system.
This system was purchased with a start-up service.
Please contact factory at 610-868-5400
to schedule a start-up date.
This will ensure proper installation and
activate the extended warranty.
System Must Be Started Within 180 Days
of Shipment to Validate Battery Warranty.
Energizing this system prior to factory
Start-up may void warranty.
Do not remove label.

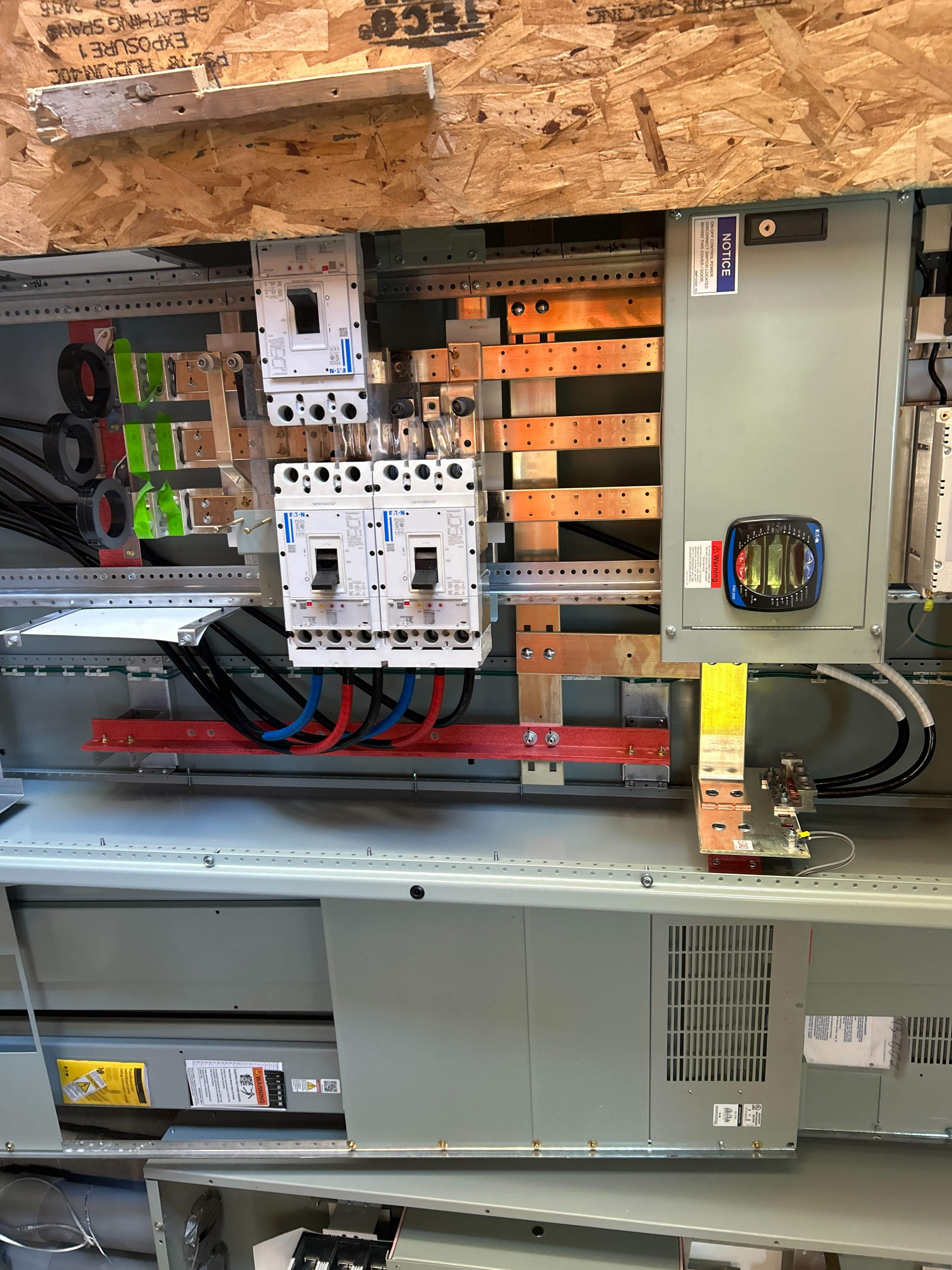
NOTICE
ON-OFF CONTROL POWER
DISCONNECT SWITCH LOCATED
BEHIND THIS COVER / DOOR.
Warning
WARNING

Refrigerant piping location
Drainage piping location
Attention
Please make a hole in the ceiling according to the printed size.
(When the ceiling material is not yet installed, this template can be used as the protective sheet as shown in Fig 1.)
① Fold up the 4 tabs.(Fig 1)
② Rest the tabs on the bent portions of the mounting plates where the panel will be attached.(Fig 2)
③ Use adhesive tape to attach the protective sheet to the unit more securely.
Fig-1
Fig-2
Unit outline
Mounting plate
Tab
BX83C291G02

30-2939

SKYJACK
SJIII 3219
800-UR-RENTS
10467600
SKYJACK
Microlite

LOUIS

SL-1940

JLG LIN
600S

Microlite
12'
NO-COAT
JLG

SJIII 3219
1-800-UR-RENTS
10588617

WARNING
WARNING

JLG LIFT

ne® Xpert
oard
DANGER

PP2-2 Rm#1
PP2-19